STAMFORD®

Parts Manual

STAMFORD Alternator Range

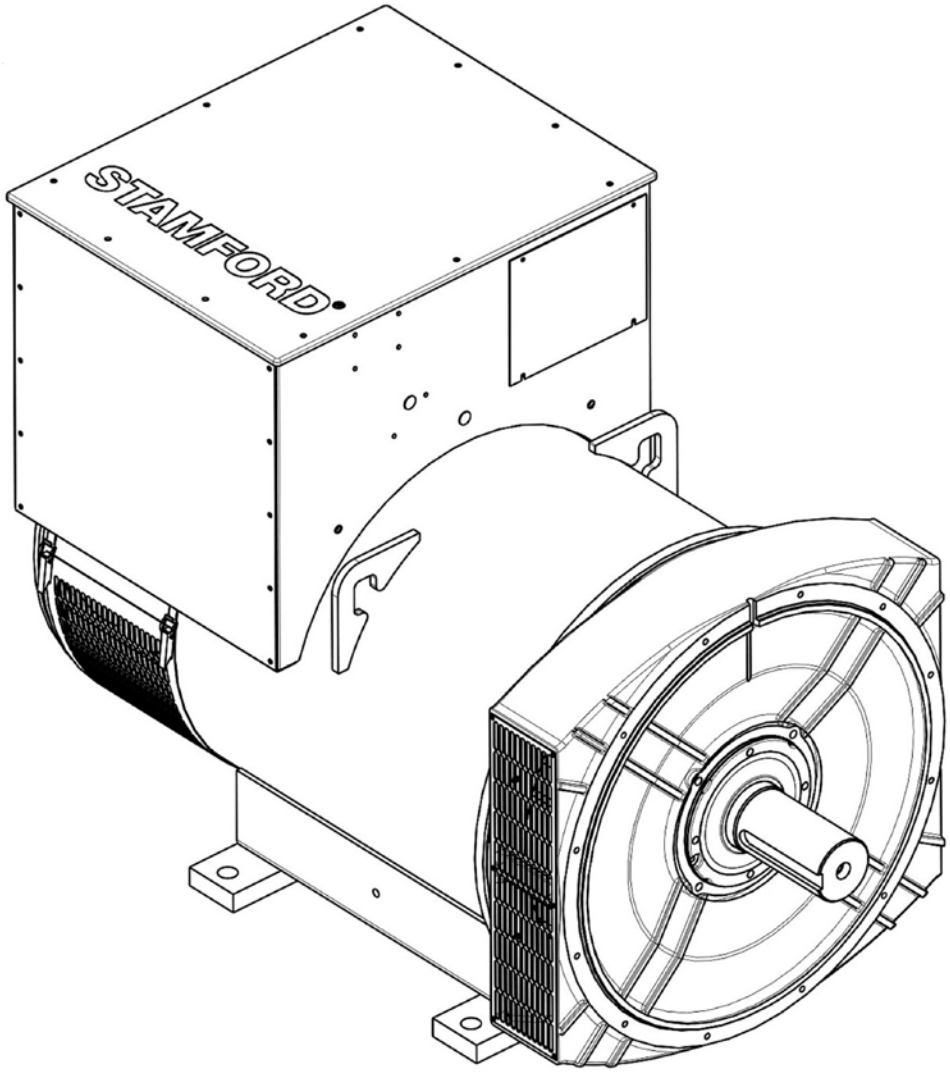

English
Original Instructions

5-2016

A053J574 (Issue 4)

Table of Contents

Description	Page
About This Manual	2
Quick Serve Online (QSOL)	3
Model Identification	4
Abbreviations	5
Planned Maintenance Kits	7
P0 – 1 Bearing	8
P1 – 1 Bearing	16
P1 – 2 Bearing	20
S0L1 – 1 Bearing	24
S0L2 – 1 Bearing	28
S1L2 – 1 Bearing	32
BCA162 & BCI162 1 Bearing (2 Pole)	36
BCA162 & BCI162 2 Bearing (2 Pole)	40
BCA164 & BCI164 1 Bearing (4 Pole)	44
BCA164 & BCI164 A To E 2 Bearing (4 Pole)	48
BCL164 & 184 A – F 1 Bearing (4 Pole)	50
BCA182 & BCI182 H TO K 1 Bearing (2 Pole)	52
BCA182 & BCI182 H TO K 2 Bearing (2 Pole)	56
BCI184 1 Bearing (4 Pole)	58
BCI184 2 Bearing (4 Pole)	62
UCD22–27 1 Bearing (4 Pole)	66
UCI224 – 1 Bearing	70
UCI224C to G – 2 Bearing (4 Pole)	74
UCI274C to H 1 Bearing	78
UCI274C to H 2 Bearing (4 Pole)	82
HC434C to F – 1 Bearing	86
HC434C to F – 2 Bearing	90
HC534C to F – 1 Bearing Ser 3 & 4	94
HC534C to F – 2 Bearing	98
HC634G to K – 1 Bearing (Ser 3)	102
HC634G to K – 2 Bearing	106
HC734E to H 1 Bearing (Ser 3)	110
HC734E to H 2 Bearing (Ser 3)	114
P7 – 1 Bearing	118
P7 – 2 Bearing	122
Frame 8 Mk2 1 Bearing	126
Frame 8 Mk2 2 Bearing	128
P80 – 1 Bearing	130
P80 – 2 Bearing	132
ACCESSORIES	135

Copyright © 2016 Cummins Generator Technologies. All Rights Reserved.

About This Manual

This manual applies to Cummins Generator Technologies Alternators. Each part illustrated is identified by a reference number corresponding to the list of part numbers in the accompanying table.

Alternator parts that have been modified or added by Cummins Power Generation are identified in this manual. Contact your nearest authorized distributor for assistance in ordering replacement parts. All other replacement parts must be ordered from the alternator manufacturer by referring to the item nameplate and supplying all available information.

Alternator Model	Alternator Model
P0	UCD22–27
P1	UCI224
S0L1	UC127
S0L2	HC434
S1L2	HC534
BCA162 & BCI162	HC634
BCL164 & 184	HC734
BCA182 & BCI182	P7
BCI184	P80

Alternator Parts:

Replacement parts not identified in this manual can be ordered by contacting your nearest dealer, to find your nearest dealer please go to:

www.stamford–avk.com

For any technical enquiries please contact
Cummins Generator Technologies Ltd
+44(o)1780 484732

mailto:emea.service@cummins.com

Copyright © 2016 Cummins Generator Technologies. All Rights Reserved.

Quick Serve Online (QSOL)

Documentation pertaining to the alternator are available on QuickServe Online.

QuickServe Online: https://quickserve.cummins.com/info/index.html

The information contained within this manual is based on information available at the time of going to print. In line with Cummins Generator Technologies policy of continuous development and improvement, information may change at any time without notice. Obtain the most up to date version available on QuickServe Online or contact your authorized distributor for assistance.

If further information is required, contact your authorsed distributor.

Copyright © 2016 Cummins Generator Technologies. All Rights Reserved.

Model Identification

This manual covers alternator models produced under the Cummins Generator Technologies brand names.

To avoid errors or delay in filling your parts order, always state the MODEL and SERIAL NUMBER from the Alternator nameplate.

The alternator serial number is located on a data tag on the alternator.

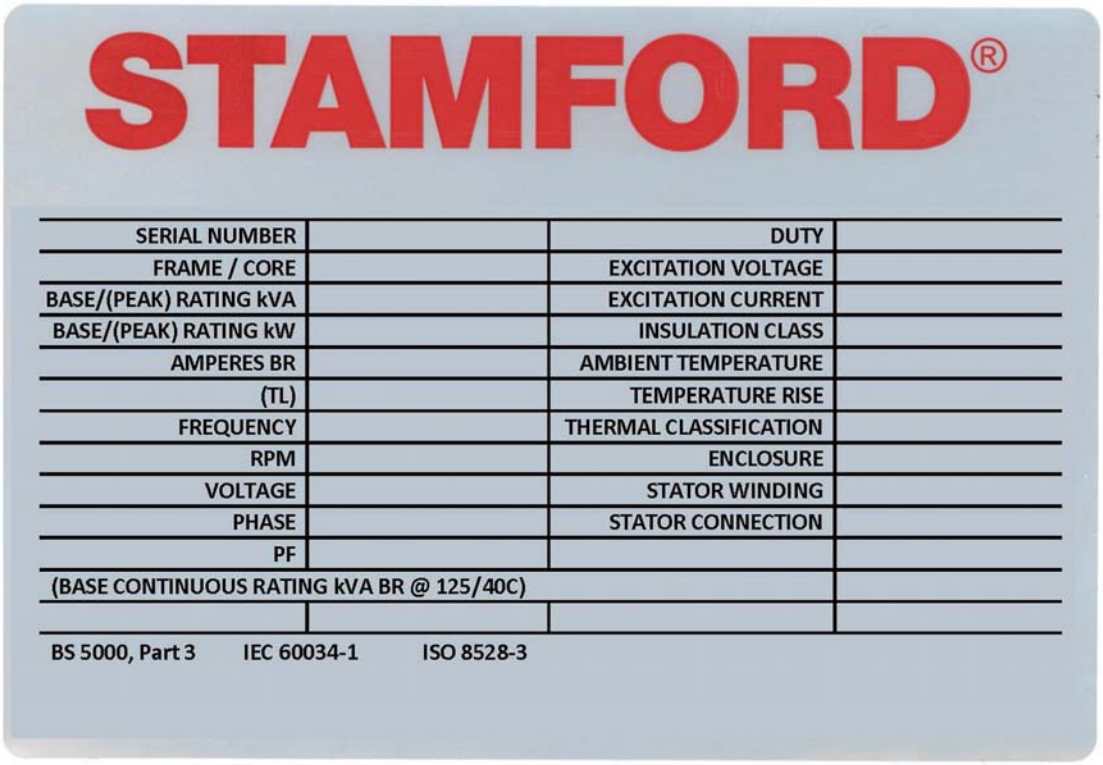

For reference document your alternator information in the spaces below.

Alternator Model Number: _____

Copyright © 2016 Cummins Generator Technologies. All Rights Reserved.

Abbreviations

Some of the following abbreviations may be used throughout this Parts Manual:

A.V.R	Automatic Voltage Regulator
E.B.S	Excitation Boost System
D.E.	Drive End
N.D.E	Non Drive End
P.M.G	Permanent Magnet Generator
Q.M.S.N	Quote Manufacturer Serial Number
S.A.E.	Society of Automotive Engineers

Copyright © 2016 Cummins Generator Technologies. All Rights Reserved.

This page is Intentionally blank.

Copyright © 2016 Cummins Generator Technologies. All Rights Reserved.

Planned Maintenance Kits

For the 30,000 hour service interval, we recommend replacing several components in order to optimise the alternator's performance. These components are contained in the kits detailed below, for each alternator type. Kit's contain bearings, bearing assembly components, where necessary and rectifier service kits.

New Kit Description (Bearing Type)	New Kit Number	Qty per Machine
S1/P0/P1 – 1 BRG 30,000HR SER KIT	A051C107	1
P0/P1 – 2 BRG 30,000HR SER KIT	A051C115	1
S0 – 1 BRG 30,000HR SER KIT	A054N489	1
UC22 – 1 BRG 30,000HR SER KIT	A051C212	1
UC22 – 2 BRG 30,000HR SER KIT	A051C216	1
HC4 – 1 BRG 30,000HR SER KIT	A051C225	1
HC4 – 2 BRG 30,000HR SER KIT	A051C230	1
HC5 – 1 BRG 30,000HR SER KIT (Sealed)	A051C232	1
HC5 – 2 BRG 30,000HR SER KIT (Sealed)	A051C234	1
HC6 – 1 BRG 30,000HR SER KIT (Sealed)	A051C237	1
HC6 – 2 BRG 30,000HR SER KIT (Sealed)	A051C243	1
P7 – 1 BRG 30,000HR SER KIT	A051C251	1
P7 – 2 BRG 30,000HR SER KIT A–E	A051C255	1
P7 – 2 BRG 30,000HR SER KIT F–G	A051C257	1
P80 – 1 BRG 30,000HR SER KIT	A051C282	1
P80 – 2 BRG 30,000HR SER KIT RST	A051C285	1
P80 – 2 BRG 30,000HR SER KIT XYZ	A051C291	1
HC5 – 1 BRG 30,000HR SER KIT (Regreaseable)	A051Z125	1
HC5 – 2 BRG 30,000HR SER KIT (Regreaseable)	A051Z131	1
HC6 – 1 BRG 30,000HR SER KIT (Regreaseable)	A051Z133	1
HC6 – 2 BRG 30,000HR SER KIT (Regreaseable)	A051Z137	1
P7 – 1 BRG 30,000HR SER KIT (Sealed)	A051Z145	1
P7 – 2 BRG 30,000HR SER KIT (Sealed)	A051Z149	1

Copyright © 2016 Cummins Generator Technologies. All Rights Reserved.

P0 – 1 Bearing

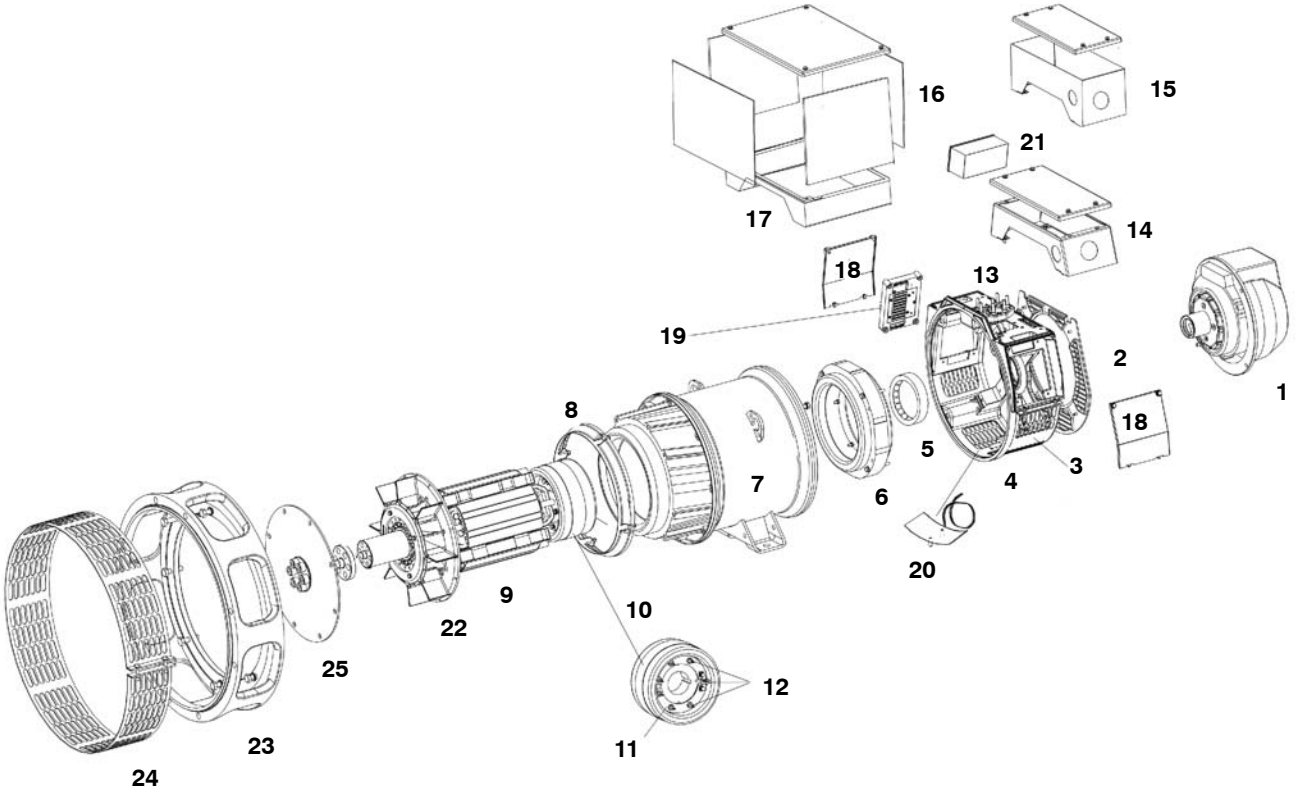

Copyright © 2016 Cummins Generator Technologies. All Rights Reserved.

P0 – 1 Bearing

Item	Part No.	Description	Qty
1	45–1210	EBS Unit (4 Pole)	1
	E000–14831	EBS Module Only for 45–1210	1
	45–1212	EBS Unit (2 Pole)	1
	E000–14831	EBS Module Only for 45–1210	1
	45–1211	EBS Unit (Cummins PCC 1302 – 4 Pole)	1
	E000–14851	EBS Module Only for 45–1211	1
	45–1213	EBS Unit (Cummins PCC 1302 – 2 Pole)	1
	E000–14851	EBS Module Only for 45–1213	1
2	191–10061	N.D.E Cover for use with EBS	1
	191–10045	N.D.E Cover for use without EBS (Not Shown)	1
3	190–10018	N.D.E Endbracket Bottom Cover	1
4	190–10025	N.D.E Endbracket	1
5	45–0866	Bearing Kit	1
6	190–1038	Exciter Stator 20mm (D, E & F)	1
	190–1039	Exciter Stator 25mm (G & H)	1
7	*	Stator Frame Assembly	1
8	191–10091	Air Flow Baffle	1
9	*	Rotor Shaft Assembly	1
10	190–1040	Exciter Rotor 20mm (D, E & F)	1
	190–1041	Exciter Rotor 25mm (G & H)	1
11	45–0427	Rotating Rectifier Assembly	1
12	RSK–1101	Diode Fwd/Rev & Varistor Kit	1
13	191–10057	Terminal, Board	1
14	45–1165	Standard Terminal Box Kit (D)	1
15	45–1206	Tall Terminal Box Kit	1
16	45–1166	Large Terminal Box Kit	1
17	45–1175	Terminal Box Plinth (Included in Item 16)	1
18	190–10027	A.V.R Cover	2
19	E000–14808/1P	A.V.R AS480 UL Approved Only Supplied	1
20	45–1161	Heater Kit 230V	1
	A040G608	Heater Kit 230V to Include Terminal Box for Retrofit	1
	45–1162	Heater Kit 115V	1
	A040G612	Heater Kit 115V to Include Terminal Box for Retrofit	1
	45–1163	Heater Kit 24V	1
	A040G614	Heater Kit 24V to Include Terminal Box for Retrofit	1
	45–1164	Heater Kit 12V	1
	A040G618	Heater Kit 12V to Include Terminal Box for Retrofit	1
21	45–1205	Heater Terminal Box for Retrofit Not Included in Heater Kits (Item 20)	1
22	191–10042	Fan	1
23	45–1190	Adapter Kit SAE 2	1

Copyright © 2016 Cummins Generator Technologies. All Rights Reserved.

P0 – 1 Bearing (Continued)

Item	Part No.	Description	Qty
	45–1191	Adapter Kit SAE 3	1
	45–1192	Adapter Kit SAE 4 (D,E,F,G)	1
	45–1197	Adapter Kit SAE 4 (Spacer 28.5)	1
	45–1193	Adapter Kit SAE 5	1
	45–1195	Adapter Kit SAE 5 (Spacer 26 Wide Lister Alpha)	1
	45–1196	Adapter Kit SAE 5 (Spacer 51.5 Wide Lister Alpha)	1
	45–1194	Adapter Kit SAE 6	1
	45–1198	Adapter Kit (AIFO)	1
	45–1199	Adapter Kit (GM)	1
24	See Item 19	Adapter Screen Included in Kit	1
25	45–1170	Coupling Kit SAE 6.5 (3mm)	1
	45–1181	Coupling Kit SAE 6.5 (3mm) (For SAE6 Adaptor)	1
	45–1183	Coupling Kit SAE 6.5 (Dished Disc) AN13.3	1
	45–1185	Coupling Kit SAE 6.5 (Dished Disc) AN30.2	1
	45–1171	Coupling Kit SAE 7.5	1
	45–1209	Coupling Kit SAE 7.5 (3mm) (Special for D Core)	1
	45–1204	Coupling Kit SAE 7.5 (Kubota) (1.2mm)	1
	45–1184	Coupling Kit SAE 7.5 (Dished Disc) AN13.3	1
	45–1186	Coupling Kit SAE 7.5 (Dished Disc) AN30.2	1
	45–1188	Coupling Kit (GM Adapter Up to G)	1
	45–1172	Coupling Kit SAE 8 (3mm)	1
	45–1173	Coupling Kit SAE 10 (3mm)	1
	45–1174	Coupling Kit SAE 11.5 (3mm)	1
	45–1180	Coupling Kit Lister/Alpha (Use with 45–1195 Only)	1
		*** This part number depends on your machine serial number. Contact your regional CGT technical support team.**	

Copyright © 2016 Cummins Generator Technologies. All Rights Reserved.

This page is Intentionally blank.

Copyright © 2016 Cummins Generator Technologies. All Rights Reserved.

P0 – 2 Bearing

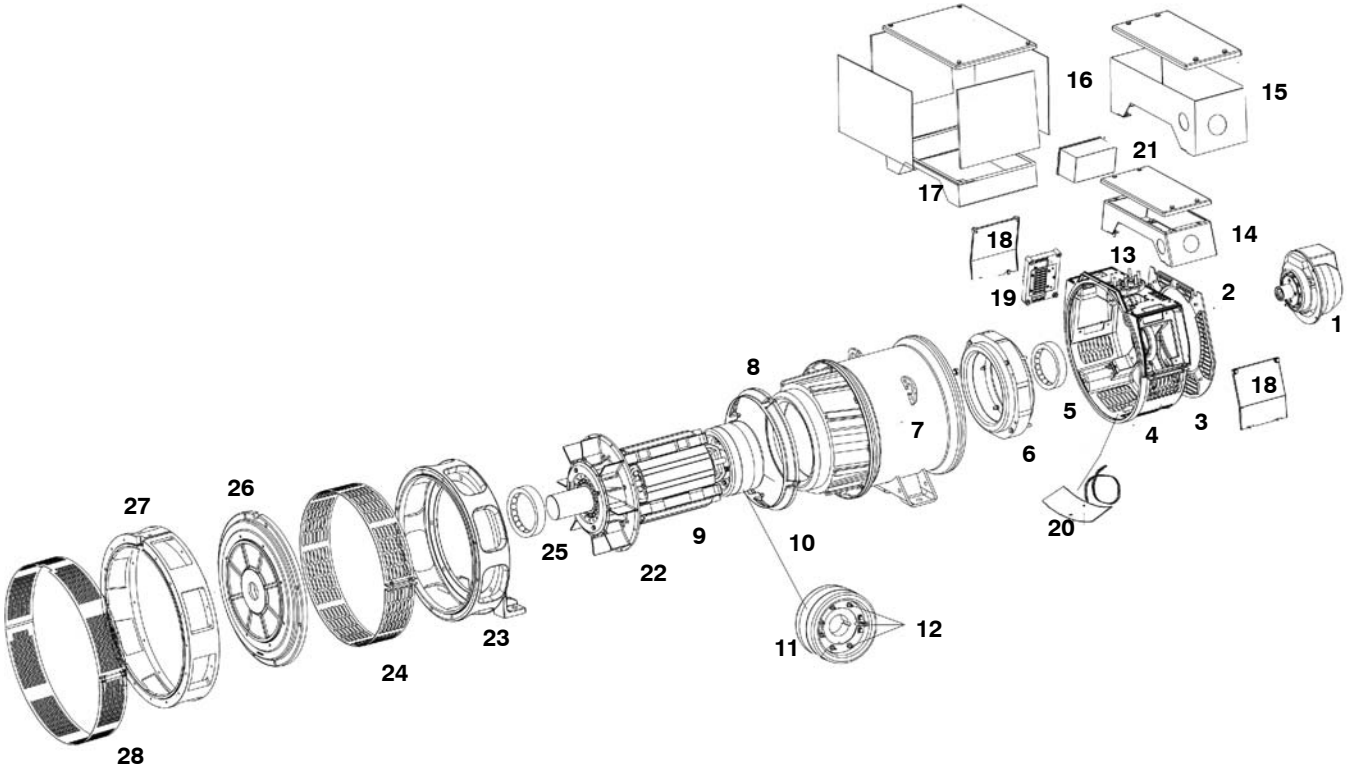

Copyright © 2016 Cummins Generator Technologies. All Rights Reserved.

P0 – 2 Bearing

Item	Part No.	Description	Qty
1	45–1210	EBS Unit (4 Pole)	1
	E000–14831	EBS Module Only for 45–1210	1
	45–1212	EBS Unit (2 Pole)	1
	E000–14831	EBS Module Only for 45–1210	1
	45–1211	EBS Unit (Cummins PCC 1302 – 4 Pole)	1
	E000–14851	EBS Module Only for 45–1211	1
	45–1213	EBS Unit (Cummins PCC 1302 – 2 Pole)	1
	E000–14851	EBS Module Only for 45–1213	1
2	191–10061	N.D.E Cover for Use With EBS	1
	191–10045	N.D.E Cover for Use Without EBS (Not Shown)	1
3	190–10018	N.D.E Endbracket Bottom Cover	1
4	190–10025	N.D.E Endbracket	1
5	45–0866	Bearing Kit	1
6	190–1038	Exciter Stator 20mm (D, E & F)	1
	190–1039	Exciter Stator 25mm (G & H)	1
7	*	Stator Frame Assembly	1
8	191–10091	Air Flow Baffle	1
9	*	Rotor Shaft Assembly	1
10	190–1040	Exciter Rotor 20mm (D, E & F)	1
	190–1041	Exciter Rotor 25mm (G & H)	1
11	45–0427	Rotating Rectifier Assembly	1
12	RSK–1101	Diode Fwd/Rev & Varistor Kit	1
13	191–10057	Terminal, Board	1
14	45–1165	Standard Terminal Box Kit (D)	1
15	45–1206	Tall Terminal Box Kit	1
16	45–1166	Large Terminal Box Kit	1
17	45–1175	Terminal Box Plinth (Included in Item 16)	1
18	190–10027	A.V.R Cover	2
19	E000–14808/1P	A.V.R AS480 UL Approved Only Supplied	1
20	45–1161	Heater Kit 230V	1
	A040G608	Heater Kit 230V to Include Terminal Box for Retrofit	1
	45–1162	Heater Kit 115V	1
	A040G612	Heater Kit 115V to Include Terminal Box for Retrofit	1
	45–1163	Heater Kit 24V	1
	A040G614	Heater Kit 24V to Include Terminal Box for Retrofit	1
	45–1164	Heater Kit 12V	1
	A040G618	Heater Kit 12V to Include Terminal Box for Retrofit	1
21	45–1205	Heater Terminal Box for Retrofit Not Included in Heater Kits (Item 20)	1
22	191–10042	Fan	1
23	190–10043	D. E. Bracket	1
24	190–10016	D. E. Screen	1
25	45–0363	D. E. Bearing Kit	1
26	190–10044	D.E. Endplate	1
27	45–1200	Adapter Kit SAE 2	1

Copyright © 2016 Cummins Generator Technologies. All Rights Reserved.

Item	Part No.	Description	Qty
	45–1201	Adapter Kit SAE 3	1
	45–1202	Adapter Kit SAE 4	1
	45–1203	Adapter Kit SAE 5	1
28	See Item 27	Adaptor screen included in kit	1
		*** – This part number depends on your machine serial number. Contact your regional CGT technical support team.**	

Copyright © 2016 Cummins Generator Technologies. All Rights Reserved.

This page is Intentionally blank.

Copyright © 2016 Cummins Generator Technologies. All Rights Reserved.

P1 – 1 Bearing

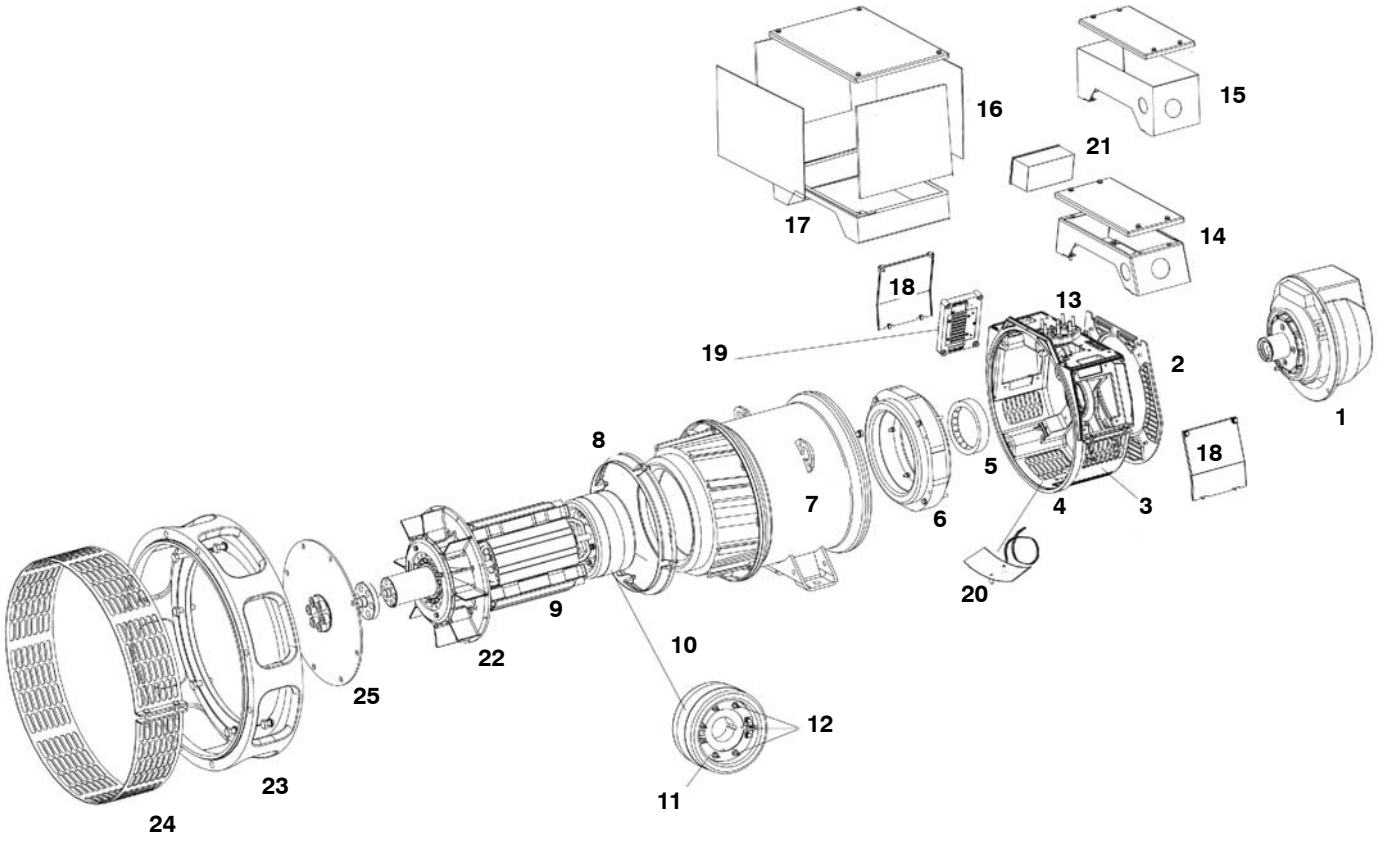

Copyright © 2016 Cummins Generator Technologies. All Rights Reserved.

P1 – 1 Bearing

Item	Part No.	Description	Qty
1	45–1210	EBS Unit (4 Pole)	1
	E000–14831	EBS Module Only for 45–1210	1
	45–1212	EBS Unit (2 Pole)	1
	E000–14831	EBS Module Only for 45–1210	1
	45–1211	EBS Unit (Cummins PCC 1302 – 4 Pole)	1
	E000–14851	EBS Module Only for 45–1211	1
	45–1213	EBS Unit (Cummins PCC 1302 – 2 Pole)	1
	E000–14851	EBS Module Only for 45–1213	1
2	191–10061	N.D.E Cover for use with EBS	1
	191–10045	N.D.E Cover for use without EBS (Not Shown)	1
3	190–10018	N.D.E Endbracket Bottom Cover (D)	1
	190–10035	N.D.E Endbracket Bottom Cover(E – K)	1
4	190–10025	N.D.E Endbracket (D)	1
	191–10055	N.D.E Endbracket (E – K)	1
5	45–0866	Bearing Kit	1
6	190–1039	Exciter stator 25mm (D)	1
	191–1067	Exciter stator 30mm (E)	1
	191–1068	Exciter stator 34mm (F – G)	1
	191–1069	Exciter stator 38mm (H – K)	1
7	*	Stator Frame Assembly	1
8	191–10091	Air Flow Baffle	1
9	*	Rotor Shaft Assembly	1
10	190–1041	Exciter Rotor 25mm (G & H)	1
	191–1072	Exciter Rotor 30mm (E)	1
	191–1063	Exciter Rotor 34mm (F – G)	1
	191–1064	Exciter Rotor 38mm(H – K)	1
11	45–0427	Rotating Rectifier Assembly	1
12	RSK–1101	Diode Fwd/Rev & Varistor Kit	1
13	191–10057	Terminal, Board	1
14	45–1165	Standard Terminal Box Kit (D)	1
	45–1168	Standard Terminal Box Kit (E – K)	1
	45–1169	Standard Terminal Box Kit CPG Set (E–K)	1
15	45–1206	Tall Terminal Box Kit	1
16	45–1166	Large Terminal Box Kit (D) C/W plinth	1
	45–1167	Large Terminal Box Kit (E – K) C/W Plinth	1
17	45–1175	Terminal Box Plinth (D)	1
	45–1176	Terminal Box Plinth (E – K)	1
18	190–10027	A.V.R Cover (D)	2

Copyright © 2016 Cummins Generator Technologies. All Rights Reserved.

P1 – 1 Bearing (Continued)

Item	Part No.	Description	Qty
	191–10056	A.V.R Cover (E – K)	2
19	E000–14808/1P	A.V.R AS480 UL Approved Only Supplied	1
20	45–1161	Heater Kit 230V	1
	A040G608	Heater Kit 230V to Include Terminal Box for Retrofit	1
	45–1162	Heater Kit 115V	1
	A040G612	Heater Kit 115V to Include Terminal Box for Retrofit	1
	45–1163	Heater Kit 24V	1
	A040G614	Heater Kit 24V to Include Terminal Box for Retrofit	1
	45–1164	Heater Kit 12V	1
	A040G618	Heater Kit 12V to Include Terminal Box for Retrofit	1
21	45–1205	Heater Terminal Box for Retrofit Not Included in Heater Kits (Item 20)	1
22	191–10042	Fan 290 mm (D–G)	1
	191–10059	Fan 344 mm (H – K	1
23	45–1190	Adapter Kit SAE 2	1
	45–1191	Adapter Kit SAE 3	1
	45–1192	Adapter Kit SAE 4 (D,E,F,G)	1
	45–1197	Adapter Kit SAE 4 (Spacer 28.5)	1
	45–1193	Adapter Kit SAE 5	1
	45–1195	Adapter Kit SAE 5 (Spacer 26 Wide Lister Alpha)	1
	45–1196	Adapter Kit SAE 5 (Spacer 51.5 Wide Lister Alpha)	1
	45–1194	Adapter Kit SAE 6	1
	45–1198	Adapter Kit (AIFO)	1
	45–1199	Adapter Kit (GM)	1
24	See Item 23	Adapter Screen Included in Kit	1
25	45–1170	Coupling Kit SAE 6.5 (3mm)	1
	45–1181	Coupling Kit SAE 6.5 (3mm) (For SAE6 Adaptor)	1
	45–1183	Coupling Kit SAE 6.5 (Dished Disc) AN13.3	1
	45–1185	Coupling Kit SAE 6.5 (Dished Disc) AN30.2	1
	45–1171	Coupling Kit SAE 7.5	1
	45–1209	Coupling Kit SAE 7.5 (3mm) (Special for D Core)	1
	45–1204	Coupling Kit SAE 7.5 (Kubota) (1.2mm)	1
	45–1184	Coupling Kit SAE 7.5 (Dished Disc) AN13.3	1
	45–1186	Coupling Kit SAE 7.5 (Dished Disc) AN30.2	1
	45–1188	Coupling Kit (GM Adapter Up to G)	1
	45–1172	Coupling Kit SAE 8 (3mm)	1
	45–1173	Coupling Kit SAE 10 (3mm)	1
	45–1174	Coupling Kit SAE 11.5 (3mm)	1
	45–1180	Coupling Kit Lister/Alpha (Use with 45–1195 Only)	1
		*** – This part number depends on your machine serial number. Contact your regional CGT technical support team.**	

Copyright © 2016 Cummins Generator Technologies. All Rights Reserved.

This page is Intentionally blank.

Copyright © 2016 Cummins Generator Technologies. All Rights Reserved.

P1 – 2 Bearing

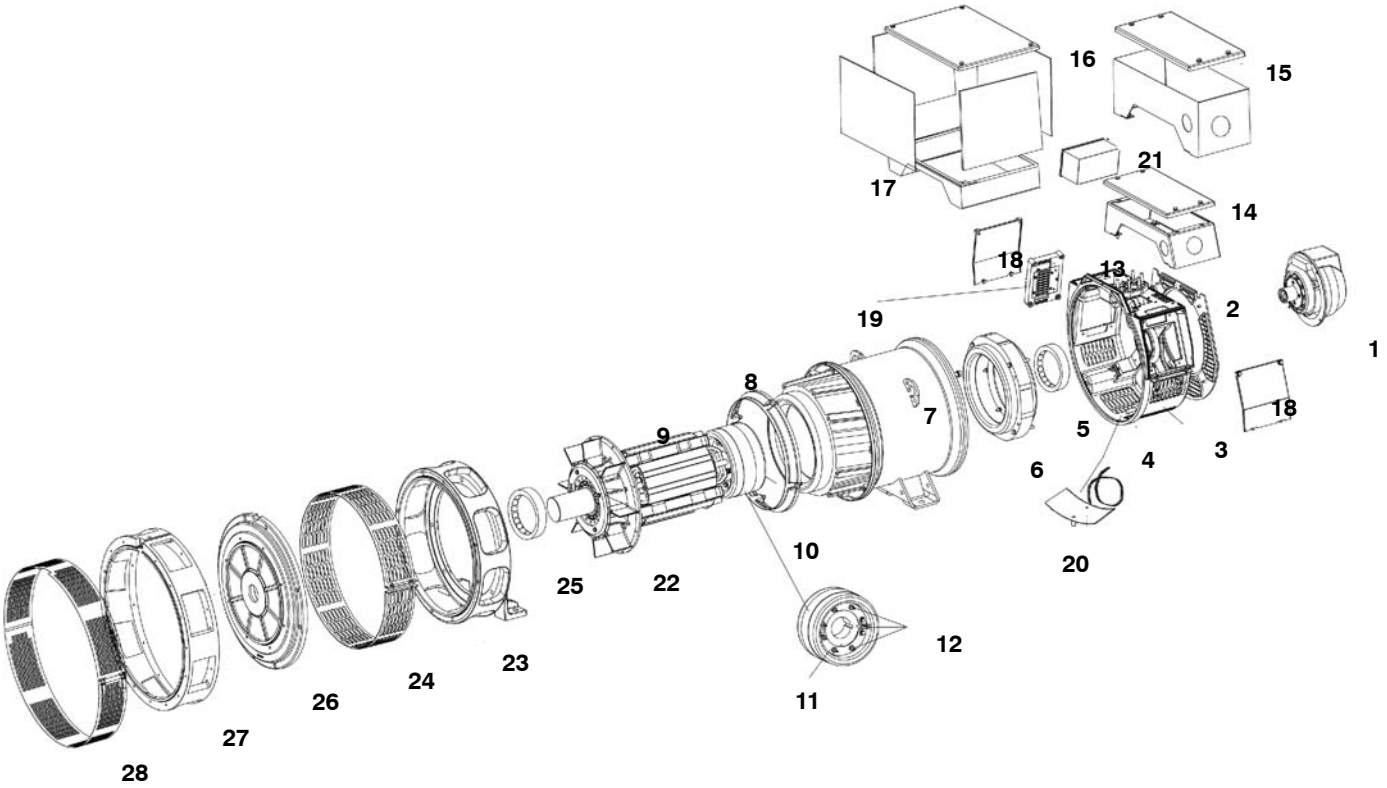

Copyright © 2016 Cummins Generator Technologies. All Rights Reserved.

P1 – 2 Bearing

Item	Part No.	Description	Qty
1	45–1210	EBS Unit (4 Pole)	1
	E000–14831	EBS Module Only for 45–1210	1
	45–1212	EBS Unit (2 Pole)	1
	E000–14831	EBS Module Only for 45–1210	1
	45–1211	EBS Unit (Cummins PCC 1302 – 4 Pole)	1
	E000–14851	EBS Module Only for 45–1211	1
	45–1213	EBS Unit (Cummins PCC 1302 – 2 Pole)	1
	E000–14851	EBS Module Only for 45–1213	1
2	191–10061	N.D.E Cover for use with EBS	1
	191–10045	N.D.E Cover for use without EBS (Not Shown)	1
3	190–10018	N.D.E Endbracket Bottom Cover (D)	1
	190–10035	N.D.E Endbracket Bottom Cover (F–K)	1
4	190–10025	N.D.E Endbracket (D)	1
	191–10055	N.D.E Endbracket (E–K)	1
5	45–0866	Bearing Kit	1
6	191–1067	Exciter Stator 30mm (E)	1
	190–1039	Exciter Stator 25mm (D)	1
	191–1068	Exciter Stator 34mm (F–G)	1
	191–1069	Exciter Stator 38mm (H–K)	1
7	*	Stator Frame Assembly	1
8	191–10091	Air Flow Baffle	1
9	*	Rotor Shaft Assembly	1
10	190–1041	Exciter Rotor 25mm D core	1
	191–1072	Exciter Rotor 30mm E core	1
	191–1063	Exciter Rotor 34mm F & G core	1
	191–1064	Exciter Rotor 38mm H–K core	1
11	45–0427	Rotating Rectifier Assembly	1
12	RSK–1101	Diode Fwd/Rev & Varistor Kit	1
13	191–10057	Terminal, Board	1
14	45–1165	Standard Terminal Box Kit (D)	1
	45–1168	Standard Terminal Box Kit (E–K)	1
	45–1169	Standard Terminal Box CPG set (E–K)	1
15	45–1206	Tall Terminal Box Kit	1
16	45–1166	Large Terminal Box Kit (D) C/W plinth	1
	45–1167	Large Terminal Box Kit (E–K) C/W plinth	1
17	45–1175	Terminal Box Plinth (D)	1
	45–1176	Terminal Box Plinth (E–K)	1

Copyright © 2016 Cummins Generator Technologies. All Rights Reserved.

P1 – 2 Bearing (Continued)

Item	Part No.	Description	Qty
18	190–10027	A.V.R Cover (D)	2
	191–10056	A.V.R Cover (E–K)	2
19	E000–14808/1P	A.V.R AS480 UL Approved Only Supplied	1
20	45–1161	Heater Kit 230V	1
	A040G608	Heater Kit 230V to Include Terminal Box for Retrofit	1
	45–1162	Heater Kit 115V	1
	A040G612	Heater Kit 115V to Include Terminal Box for Retrofit	1
	A040G614	Heater Kit 24V to Include Terminal Box for Retrofit	1
	45–1163	Heater Kit 24V	1
	45–1164	Heater Kit 12V	1
	A040G618	Heater Kit 12V to Include Terminal Box for Retrofit	1
21	45–1205	Heater Terminal Box for Retrofit Not Included in Heater Kits (Item 20)	1
22	191–10042	Fan 290 mm (D–G)	1
	191–10059	Fan 290 mm (H–K)	1
23	191–10119	D.E. Bracket	1
24	191–10029	D.E. Bracket screen	1
25	45–0363	D.E. Bearing kit	1
26	191–10029	D.E. Endplate (D–G)	1
27	45–1200	Adapter Kit SAE 2	1
	45–1201	Adapter Kit SAE 3	1
	45–1202	Adapter Kit SAE 4	1
	45–1203	Adapter Kit SAE 5	1
28	See Item 27	Adapter Screen Included in Kit	1
		*** – This part number depends on your machine serial number. Contact your regional CGT technical support team.**	

Copyright © 2016 Cummins Generator Technologies. All Rights Reserved.

This page is Intentionally blank.

Copyright © 2016 Cummins Generator Technologies. All Rights Reserved.

S0L1 – 1 Bearing

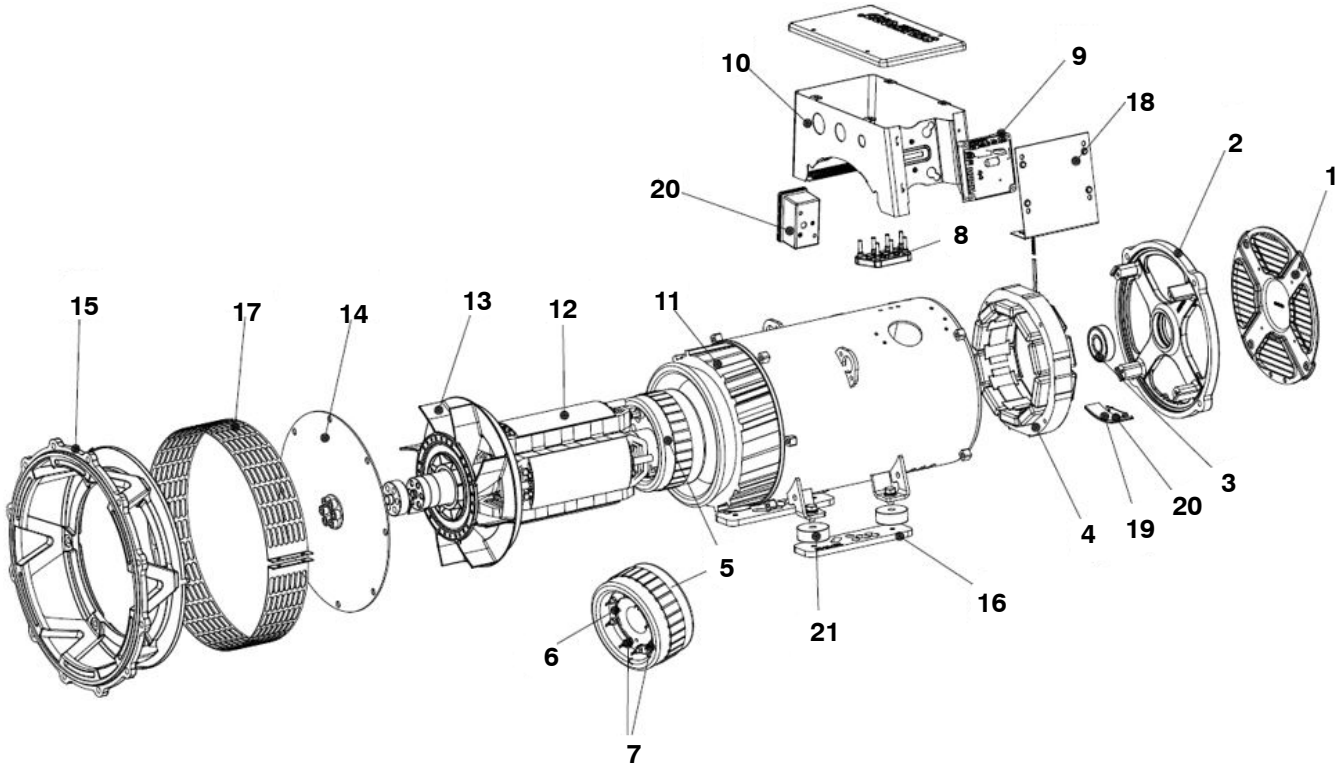

Copyright © 2016 Cummins Generator Technologies. All Rights Reserved.

S0L1 – 1 Bearing

Item	Part No.	Description	Qty
1	A052E628	Cover, End	1
2	A051P115	Brkt, End, F0, NDE	1
3	A054H811	Kit, Brg, F1, NDE, S0L2, 1B	1
4*	A052J112	Str, Exc, 30.0	1
4#	A052J113	Str, Exc, 35.0	1
5*	A052J677	Rtr, Exc, 30.0	1
5#	A052J678	Rtr, Exc, 35.0	1
6	A051C308	Rectfr, Rot, F0	1
7	A054H820	Kit, Diode Repair, F1	1
8*	A054H831	Kit, Term, F1, Term Brd Conver	1
8#	A054L339	Kit, Term, F0	1
9	A054P369	Kit, Regn Ctrl Mdl, AS540	1
10	A052X170	Term Encl, F0, IP23	
11	*	Wound Main Stator with Frame Assembly	1
12	*	Wound Main Rotor with Complete Assembly	1
13	A052F581	Fan, F0, 1, CTRF250	1
14	A053E721	Coupling Kit, F0, SAE6.5, 1B	1
	A052W678	Coupling Kit, F0, SAE7.5, 1B	1
	A052W626	Coupling Kit, F0, SAE10, 1B	1
	A052W676	Coupling Kit, F0, SAE11.5, 1B	1
15	A053E622	Adapter Kit, F0, SAE3, 1B	1
	A052V920	Adapter Kit, F0, SAE4, 1B	1
	A053E624	Adapter Kit, F0, SAE5, 1B	1
16*	A052X624	Foot Kit, F0, Bolt-On, 132.0C/H	1
17*	A054L239	Kit, Adpt Sprs, F0 SAE3 1B, IP23	1
17#	A054L242	Kit, Adpt Sprs, F0 SAE4 1B, IP23	1
17**	A054L246	Kit, Adpt Sprs, F0 SAE5 1B, IP23	1
18	A052F476	Panel, Term Encl, F0, SD, IP23	1
19	A053L646	Htr, Cart, 25.0W, 12VAC, 0VDC	1
	A053L668	Htr, Cart, 25.0W, 24VAC, 0VDC	1
	A053P092	Htr, Cart, 25.0W, 115VAC, 0VDC	1
	A053P101	Htr, Cart, 25.0W, 230VAC, 0VDC	1
20	A054K278	Kit, Htr, F0, 12V	1
	A054K280	Kit, Htr, F0, 24V	1
	A054K282	Kit, Htr, F0, 115V	1
	A054K284	Kit, Htr, F0, 230V	1
21*	A051L180	Spacer, BK, 0.0	4
		Continued...	

Copyright © 2016 Cummins Generator Technologies. All Rights Reserved.

S0L1 – 1 Bearing (Continued)

Item	Part No.	Description	Qty
		*** – This part number depends on your machine serial number. Contact your regional CGT technical support team.**	
		NOTES:	
		4* Exciter Stator 30 MM (D,H,J)	
		4# Exciter Stator 35 MM (L,P,S)	
		5* Exciter Stator 30 MM (D,H,J)	
		5# Exciter Rotor 35 MM (L,P,S)	
		8* Terminal Board Kit (3 Phase)	
		8# Terminal Board Kit (1 Phase)	
		16* Generator Base Plate (Foot Plates Only) Kit	
		17* DE Screen SAE 3	
		17# DE Screen SAE 4	
		17** DE Screen SAE 5	
		21* 28 mm Height Spacer Block	

Copyright © 2016 Cummins Generator Technologies. All Rights Reserved.

This page is Intentionally blank.

Copyright © 2016 Cummins Generator Technologies. All Rights Reserved.

S0L2 – 1 Bearing

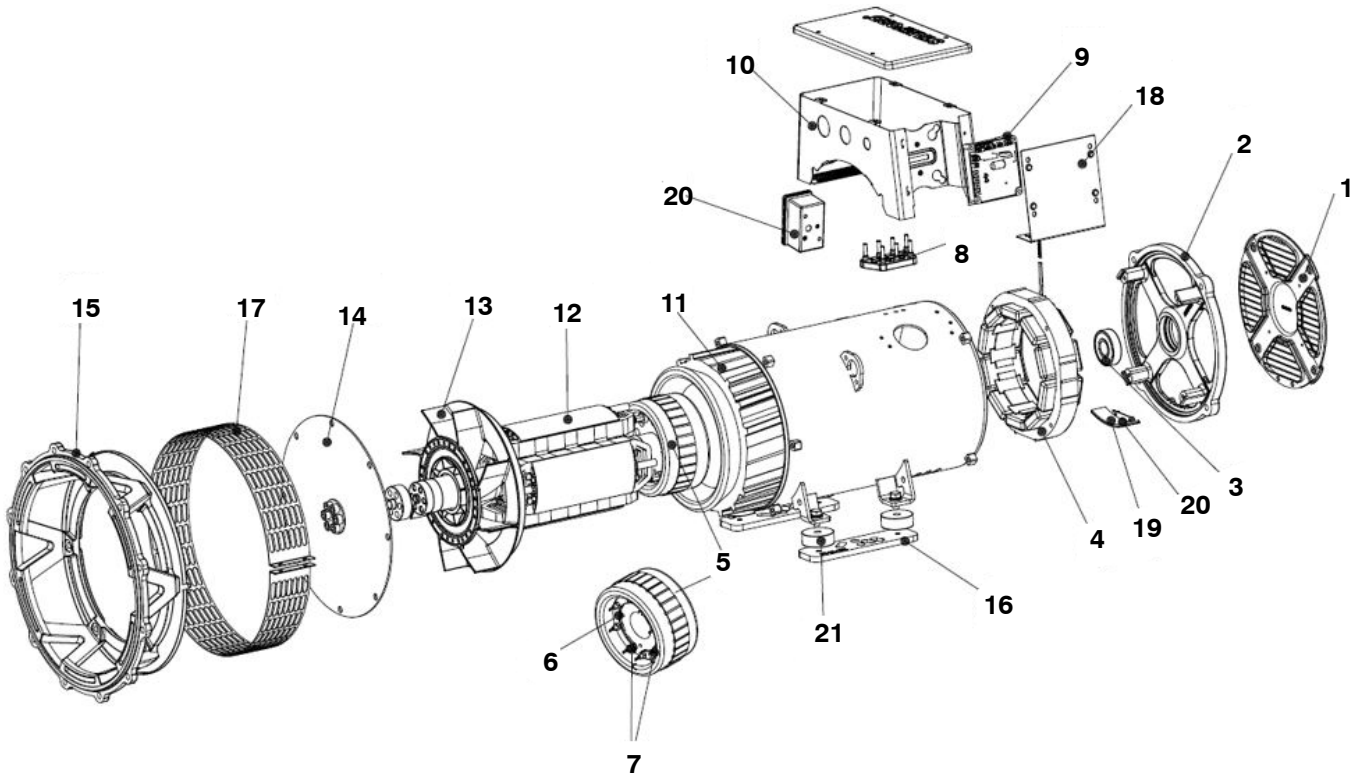

Copyright © 2016 Cummins Generator Technologies. All Rights Reserved.

S0L2 – 1 Bearing

Item	Part No.	Description	Qty
1	A052E626	Cover, End	1
2	A051P111	Brkt, End, F1, NDE	1
3	A054H811	Kit, Brg, F1, NDE, S0L2, 1B	1
4*	A052J112	Str, Exc, 25.0, Epxy Tapd	1
4#	A051G467	Str, Exc, 30.0, Epxy Tapd	1
4**	A051L225	Str, Exc, 34.0, Epxy Tapd	1
5*	190–1041	P0 Wnd Ex Rtr 25MM	1
5#	191–1072	P1 Wnd Ex Rtr 30MM	1
5**	191–1063	P1 Wnd Ex Rtr 34MM	1
6	A054H816	Kit, Rot Rectfr, F1	1
7	A054H820	Kit, Diode Repair, F1	1
8*	A054H831	Kit, Term, F1, Term Brd Conver	1
8#	A054H854	Kit, Term, F1, Term Brd Conver	1
9	A054P369	Kit, Regn Ctrl Mdl, AS540	1
10	A052X183	Term Encl, F1, IP23	
11	*	Wound Main Stator with Frame Assembly	1
12	*	Wound Main Rotor with Complete Assembly	1
13	A052F473	Fan, F1, 1, CTRF295	1
14	A053F397	Coupling Kit, F1, SAE6.5, 1B	1
	A053F395	Coupling Kit, F1, SAE7.5, 1B	1
	A052W684	Coupling Kit, F1, SAE10, 1B	1
	A052W607	Coupling Kit, F1, SAE11.5, 1B	1
	A054G545	Coupling Kit, F1, SAE11.5, 1B	1
15	A052V905	Adapter Kit, F1, SAE3, 1B	1
	A053F381	Adapter Kit, F1, SAE4, 1B	1
	A053F383	Adapter Kit, F1, SAE5, 1B	1
16*	A052X629	Foot Kit, F1, Bolt-On, 160.0C/H	1
17*	A054H863	Kit, Adpt Sprs, F1 SAE3 1B, IP23	1
17#	A054H889	Kit, Adpt Sprs, F1 SAE4 1B, IP23	1
17**	A054H900	Kit, Adpt Sprs, F1 SAE5 0B, IP23	1
18	A052H908	Panel, Term Encl, F1, SD, IP23	1
19	A053L652	Htr, Cart, 30.0W, 12VAC, 0VDC	1
	A053L666	Htr, Cart, 30.0W, 24VAC, 0VDC	1
	A053L667	Htr, Cart, 30.0W, 115VAC, 0VDC	1
	A053L669	Htr, Cart, 30.0W, 230VAC, 0VDC	1
20	A054K286	Kit, Htr, F1, 12V	1
	A054K288	Kit, Htr, F1, 24V	1
	A054K290	Kit, Htr, F1, 115V	1
	A054K292	Kit, Htr, F1, 230V	1
21*	A051L176	Spacer, BK, Steel S275–Black, 0.	4
		Continued...	

Copyright © 2016 Cummins Generator Technologies. All Rights Reserved.

S0L2 – 1 Bearing (Continued)

Item	Part No.	Description	Qty
		*** – This part number depends on your machine serial number. Contact your regional CGT technical support team.**	
		NOTES:	
		4* Exciter Stator 25 MM (F,G,K)	
		4# Exciter Stator 30 MM (M)	
		4** Exciter Stator 34 MM (P,U)	
		5* Exciter Rotor 25 MM (F,G,K)	
		5# Exciter Rotor 30 MM (M)	
		5** Exciter Rotor 34 MM (P,U)	
		8* Terminal Board Kit (3 Phase)	
		8# Terminal Board Kit (1 Phase)	
		16* Generator Base Plate (Foot Plates Only) Kit	
		17* DE Screen SAE 3	
		17# DE Screen SAE 4	
		17** DE Screen SAE 5	
		21* 20 mm Height Spacer Block	

Copyright © 2016 Cummins Generator Technologies. All Rights Reserved.

This page is Intentionally blank.

Copyright © 2016 Cummins Generator Technologies. All Rights Reserved.

S1L2 – 1 Bearing

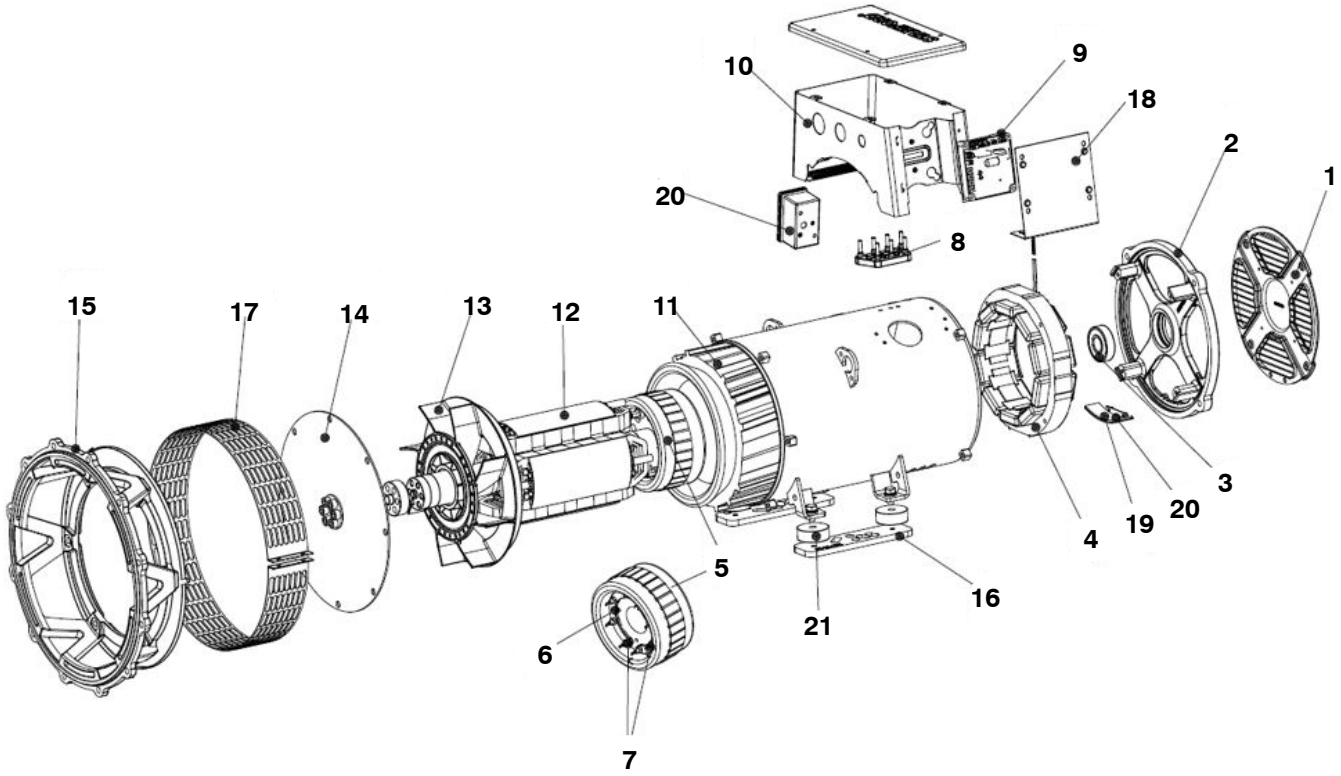

Copyright © 2016 Cummins Generator Technologies. All Rights Reserved.

S1L2 – 1 Bearing

Item	Part No.	Description	Qty
1	A052E494	Cover, End	1
2	A051P107	Brkt, End, F1, NDE	1
3	45–0866	P0 Bearing Kit P0	1
4*	A051L226	Str, Exc, 38.0	1
4#	A051L227	Str, Exc, 45.0	1
4**	A053F533	Str, Exc, 55.0	1
5*	191–1064	P1 Wnd Ex Rtr 38 MM	
5#	A051L228	Rtr, Exc, 45.0	1
5**	A053F505	Rtr, Exc, 55.0	1
6	45–0427	BC ROT'G Rectifier Spares Kit	1
7	RSK–1101	BC1 Rectifier Service Kit	1
8*	A054X535	Kit, Term, F1, Term Brd Conver	1
8#	A054X533	Kit, Term, F1, Term Brd Conver	1
9	A054P369	Kit, Regn Ctrl Mdl, AS540	1
10	A052X197	Term Encl, F1, IP23	
11	*	Wound Main Stator with Frame Assembly	1
12	*	Wound Main Rotor with Complete Assembly	1
13	A052H292	Fan, F0, 1, CTRF350	1
14	A052W687	Coupling Kit, F1, SAE10, 1B	1
	A053G584	Coupling Kit, F1, SAE10, 1B	1
	A052W630	Coupling Kit, F1, SAE11.5, 1B	1
	A053G582	Coupling Kit, F1, SAE11.5, 1B	1
15	A052T358	Adapter Kit, F1, SAE3, 1B	1
	A053F333	Adapter Kit, F1, SAE4, 1B	1
16*	A052X631	Foot Kit, F1, Bolt-On, 180.0C/H	1
17*	A054X974	Kit, Adpt Sprs, F1 SAE3 1B, IP23	1
18	A052J157	Panel, Term Encl, F1, SD, IP23	1
19	A053L670	Htr, Cart, 30.0W, 12VAC, 0VDC	1
	A053L675	Htr, Cart, 30.0W, 24VAC, 0VDC	1
	A053L677	Htr, Cart, 30.0W, 115VAC, 0VDC	1
	A053L678	Htr, Cart, 30.0W, 230VAC, 0VDC	1
20	A054K294	Kit, Htr, F1, 12V	1
	A054K297	Kit, Htr, F1, 24V	1
	A054K299	Kit, Htr, F1, 115V	1
	A054K301	Kit, Htr, F1, 230V	1
21*	A051L177	Spacer, BK, 0.0	4
21**	A051L176	Spacer, BK, Steel S275–Black, 0.	4
		Continued...	

Copyright © 2016 Cummins Generator Technologies. All Rights Reserved.

S1L2 – 1 Bearing (Continued)

Item	Part No.	Description	Qty
		*** – This part number depends on your machine serial number. Contact your regional CGT technical support team.**	
		NOTES:	
		4* Exciter Stator 38 MM (J,K,G,H)	
		4# Exciter Stator 45 MM (N,R)	
		4** Exciter Stator 55 MM (Y)	
		5* Exciter Rotor 38 MM (J,K,G,L)	
		5# Exciter Rotor 45 MM (N,R)	
		5** Exciter Rotor 55 MM (Y)	
		8* Terminal Board Kit (3 Phase)	
		8# Terminal Board Kit (1 Phase)	
		16* Generator Base Plate (Foot Plates Only) Kit	
		17* DE Screen SAE 3, SAE 4	
		21* 45 mm Height Spacer Block	
		21** 20 mm Height Spacer Block	

Copyright © 2016 Cummins Generator Technologies. All Rights Reserved.

This page is Intentionally blank.

Copyright © 2016 Cummins Generator Technologies. All Rights Reserved.

BCA162 & BCI162 1 Bearing (2 Pole)

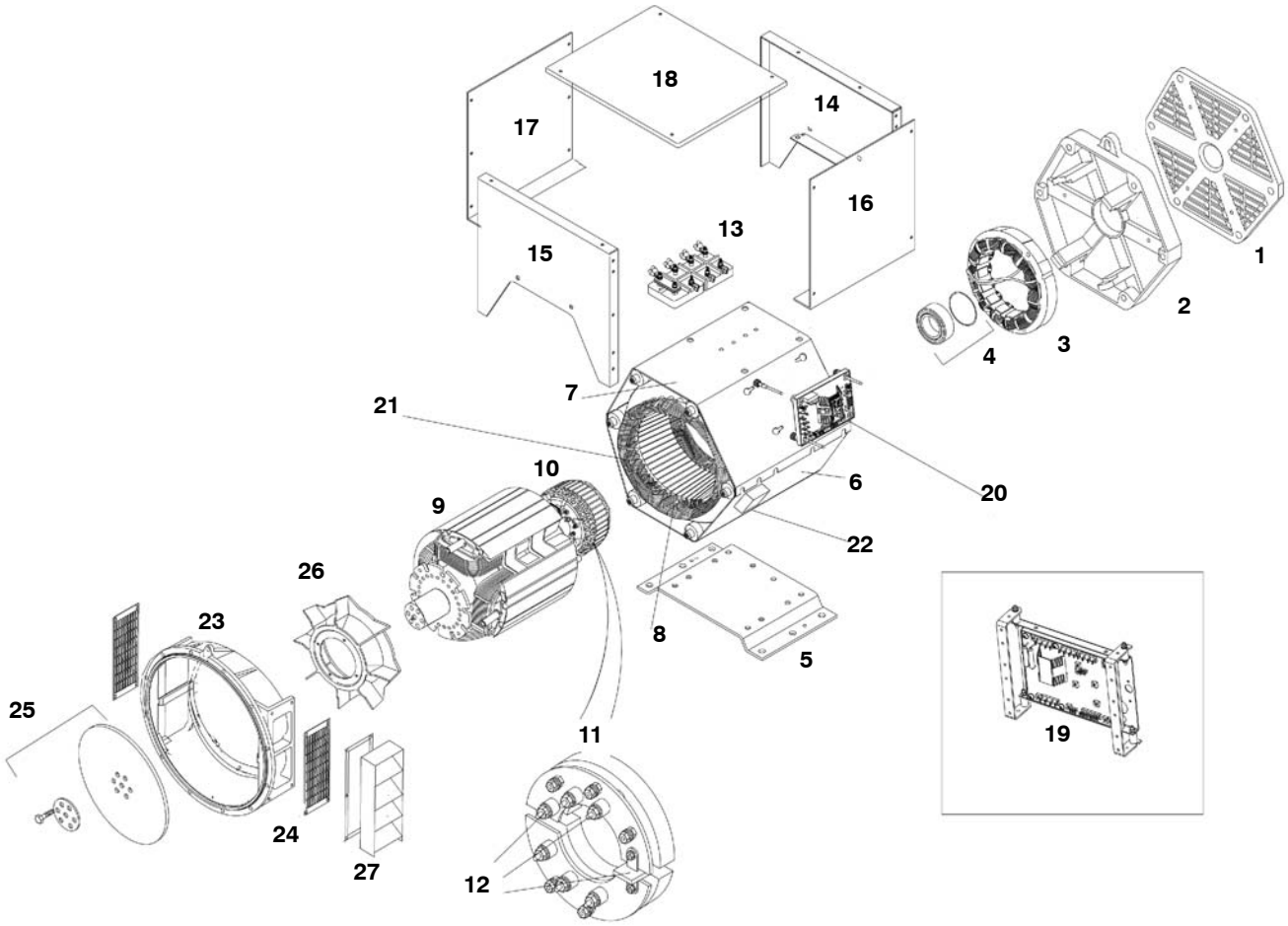

Copyright © 2016 Cummins Generator Technologies. All Rights Reserved.

BCA162 & BCI162 1 Bearing (2 Pole)

Item	Part No.	Description	Qty
1	130–20661	N.D.E. Cover	1
2	130–20667	N.D.E.Bracket	1
3	130–1379	Exciter stator (20mm) D – G & N	1
	130–1380	Exciter stator (25mm) H	1
	130–1381	Exciter stator (30mm) J – I	1
4	45–0866	N.D.E. Bearing Kit	1
5	130–20830	Foot	1
6	130–20745	Frame cover bottom D – E	1
	130–20800	Frame cover bottom F – G	1
	130–20836	Frame cover bottom J	1
	130–21385	Frame cover bottom I	1
	130–22002	Frame cover top D – E	1
	130–22021	Frame cover top F– G	1
7	130–22022	Frame cover top J	1
	130–22007	Frame cover top I	1
8	QMSN	Main stator bar assembly	1
9	QMSN	Main rotor shaft assembly	1
10	130–1384	Exciter rotor (20mm) D – G & N	1
	130–1385	Exciter rotor (25mm) H	1
	130–1386	Exciter rotor (30mm) J – I	1
11	45–0427	Rectifier assembly	1
12	RSK–1101	Diode Fwd/Rev & Varistor Kit	1
13	130–22000	Main terminal panel	1
14	130–22008	N.D.E. Terminal panel	1
15	130–22008	D.E. Terminal panel	1
16	130–20820	Side panel (A.V.R.) to (30/10/05) AVM type	1
	130–20993	Side panel (A.V.R.) from (30/10/05)	1
17	130–20819	Side panel	1
18	130–20821	Terminal box lid	1
19	45–0755	A.V.R. Mounting assy kit (no AVR)	1
20	E000–24602/1P	A.V.R. SX460 (standard)	1
	E000–24608/1P	A.V.R. SX460 UL approved	1
	E000–24403/1P	A.V.R. AS440	1
	E000–24408/1P	A.V.R. AS440 ULapproved	1
21	45–0118	Heater 110–120v	1
	45–0117	Heater 220–260v	1
22	45–0024	Heater terminal box (for retrofit)	1
23	45–0830	D.E. Adaptor SAE 2	1
	45–0756	D.E. Adaptor SAE 3	1
	45–0723	D.E. Adaptor SAE 4	
	45–0813	D.E. Adaptor SAE 5	

Copyright © 2016 Cummins Generator Technologies. All Rights Reserved.

BCA162 & BCI162 1 Bearing (2 POLE) (Continued)

Item	Part No.	Description	Qty
	45–0725	D.E. Adaptor SAE 6	1
24	130–21325	D.E. Screen SAE 2/4/5	2
25	130–20685	D.E. Screen SAE 3	2
26	45–0743	Coupling Kit SAE 6.5 (for SAE 4 & 5)	1
	45–0748	Coupling Kit SAE 6.5 (for SAE 6)	1
	45–0744	Coupling Kit SAE 7.5 (for SAE 4 & 5)	1
	45–0749	Coupling Kit SAE 7.5 (for SAE 6)	1
	45–0745	Coupling Kit SAE 8 (for SAE 4 & 5)	1
	45–0772	Coupling Kit SAE 8 (for SAE 3)	1
	45–0750	Coupling Kit SAE 10 (for SAE 2)	1
	45–0773	Coupling Kit SAE 10 (for SAE 3)	1
	45–0746	Coupling Kit SAE 10 (for SAE 4)	1
	45–0775	Coupling Kt SAE 11.5 (for SAE 2)	1
	45–0774	Coupling Kit SAE 11.5 (for SAE 3)	1
	45–0751	Coupling Kit lister tx 2 & 3	1
27	45–0726	Fan SAE 3 & 4	1
	45–0727	Fan SAE 5 & 6	1

Copyright © 2016 Cummins Generator Technologies. All Rights Reserved.

This page is Intentionally blank.

Copyright © 2016 Cummins Generator Technologies. All Rights Reserved.

BCA162 & BCI162 2 Bearing (2 Pole)

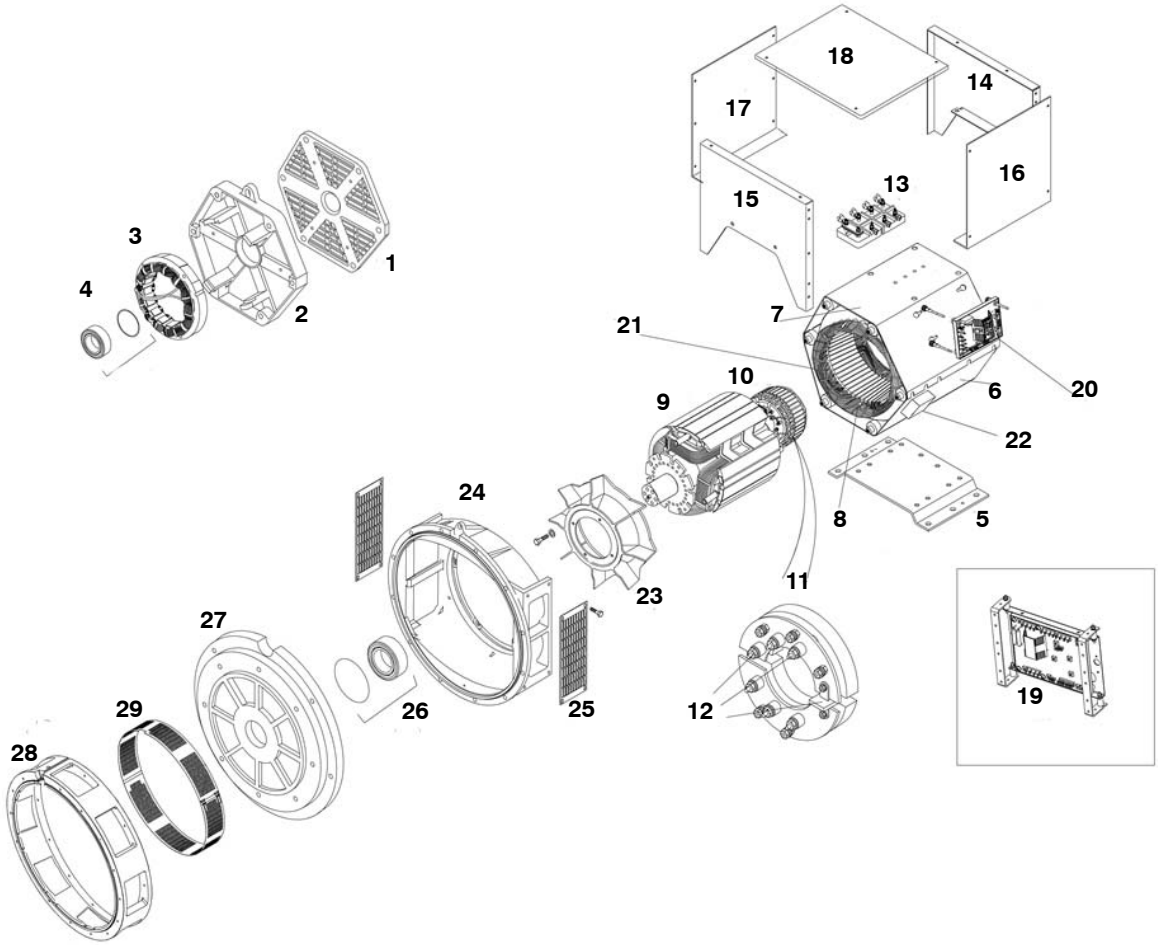

Copyright © 2016 Cummins Generator Technologies. All Rights Reserved.

BCA162 & BCI162 2 Bearing (2 Pole)

Item	Part No.	Description	Qty
1	130–20661	N.D.E. Cover	1
2	130–20667	N.D.E. Bracket	1
3	130–1379	Exciter stator (20mm) D – G & N	1
	130–1380	Exciter stator (25mm) H	1
	130–1381	Exciter stator (30mm) J – I	1
4	45–0866	N.D.E. Bearing kit	1
5	130–20830	Foot	1
6	130–20745	Frame cover bottom D – E	1
	130–20800	Frame cover bottom F – G	2
	130–20836	Frame cover bottom J	1
	130–21385	Frame cover bottom I	1
7	130–22002	Frame cover top D – E	1
	130–22021	Frame cover top F– G	1
	130–22022	Frame cover top J	1
	130–22007	Frame cover top I	1
8	QMSN	Main stator bar assembly	1
9	QMSN	Main rotor shaft assembly	1
10	130–1384	Exciter rotor (20mm) D – G & N	1
	130–1385	Exciter rotor (25mm) H	2
	130–1386	Exciter rotor (30mm) J – I	1
11	45–0427	Rectifier assembly	1
12	RSK–1101	Diode Fwd/Rev & Varistor Kit	1
13	130–22000	Main terminal panel	1
14	130–22008	N.D.E. Terminal panel	1
15	130–22008	D.E. Terminal panel	1
16	130–20820	Side panel (A.V.R.) to (30/10/05) AVM type	1
	130–20993	Side panel (A.V.R.) from (30/10/05)	1
17	130–20819	Side panel	1
18	130–20821	Terminal box lid	1
19	45–0755	A.V.R. Mounting assy Kit (no AVR)	1
20	E000–24602/1P	A.V.R. SX460 (standard)	1
	E000–24608/1P	A.V.R. SX460 UL approved	1
	E000–24403/1P	A.V.R. AS440	1
	E000–24408/1P	A.V.R. AS440 UL approved	2
21	45–0118	Heater 110–120v	1
	45–0117	Heater 220–260v	1
22	45–0024	Heater terminal box (for retrofit)	1
23	45–0727	Fan SAE 5 & 6	1
24	130–21602	D.E. Adaptor bracket SAE 5	1
25	130–21325	D.E. Screen	
26	45–0363	D.E. Bearing Kit	

Copyright © 2016 Cummins Generator Technologies. All Rights Reserved.

BCA162 & BCI162 2 Bearing (2 Pole) (Continued)

Item	Part No.	Description	Qty
27	130–20773	D.E. Endbracket	1
28	45–0719	Adaptor Kit SAE 2	1
	45–0619	Adaptor Kit SAE 3	1
	45–0620	Adaptor Kit SAE 4	1
	45–0621	Adaptor Kit SAE 5	1
29	SEE ITEM 28	Adaptor screen included in adaptor kit	1

Copyright © 2016 Cummins Generator Technologies. All Rights Reserved.

This page is Intentionally blank.

Copyright © 2016 Cummins Generator Technologies. All Rights Reserved.

BCA164 & BCI164 1 Bearing (4 Pole)

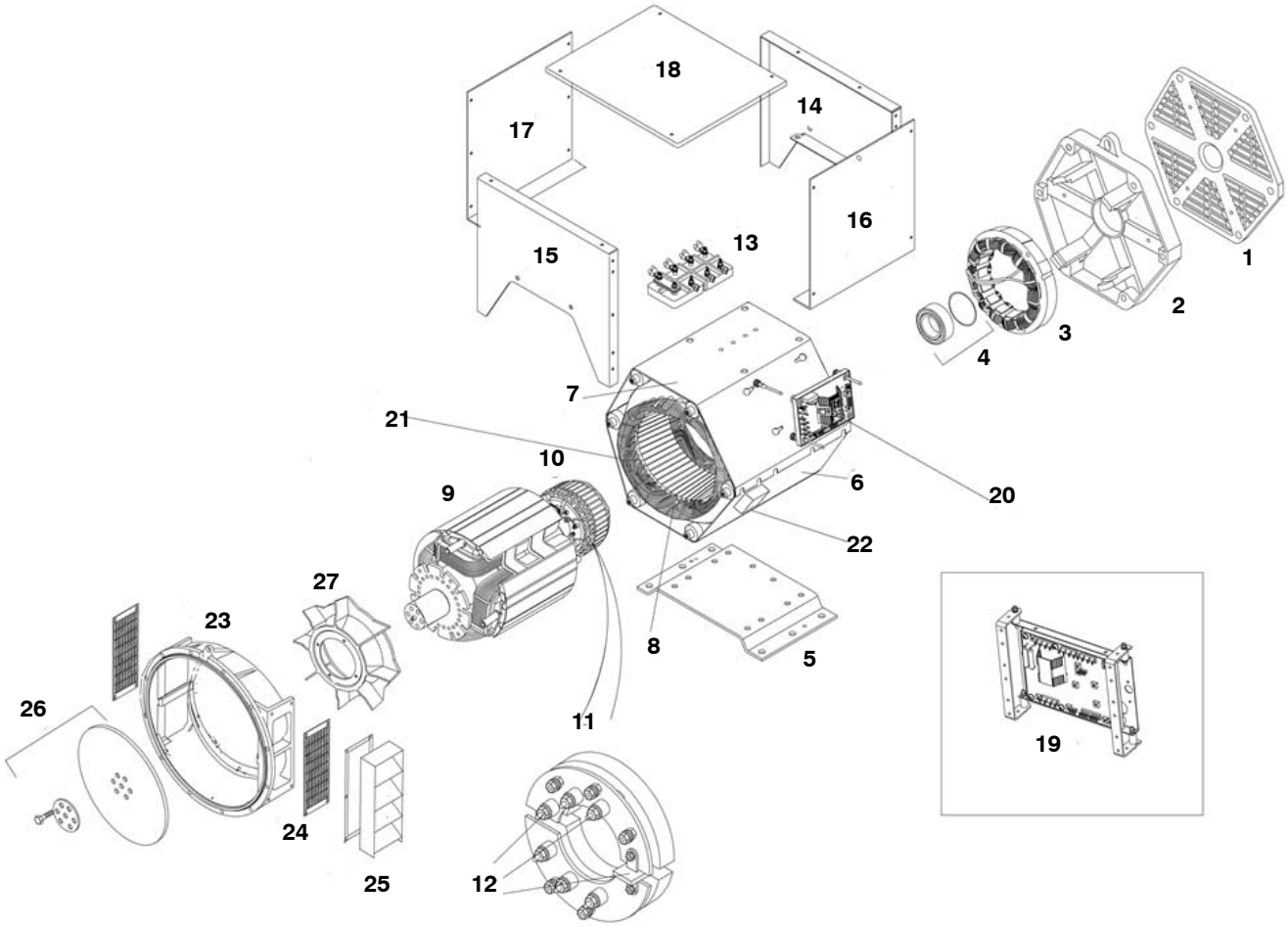

Copyright © 2016 Cummins Generator Technologies. All Rights Reserved.

BCA164 & BCI164 1 Bearing (4 Pole)

Item	Part No.	Description	Qty
1	130–20661	N.D.E. Cover	1
2	130–20667	N.D.E. Bracket	1
3	130–1380	Exciter stator (25mm) A –D	1
	130–1381	Exciter stator (30mm) E	1
4	45–0866	N.D.E. Bearing Kit	1
5	130–20830	Foot	1
6	130–20745	Frame cover bottom A – B	1
	130–20834	Frame cover bottom C – D	1
	130–20802	Frame cover bottom E	1
	130–20786	Frame cover bottom F – G	1
7	130–20998	Frame cover top A – B	1
	130–20999	Frame cover top C – D	1
	130–21000	Frame cover top E	1
	130–21001	Frame cover top F	1
8	QMSN	Main stator bar assembly	1
9	QMSN	Main rotor shaft assembly	1
10	130–1385	Exciter rotor (25mm) A – D	1
	130–1386	Exciter rotor (30mm) E	1
11	45–0427	Rectifier assembly	2
12	RSK–1101	Diode Fwd/Rev & Varistor Kit	1
13	130–22000	Main terminal panel	1
14	130–22008	N.D.E.Terminal panel	1
15	130–22008	D.E. Terminal panel	1
16	130–20820	Side panel (A.V.R.) to (30/10/05) avm type	1
	130–20993	Side panel (A.V.R.) from (30/10/05)	1
17	130–20819	Side panel	1
18	130–20821	Terminal box lid	1
19	45–0755	A.V.R. Mounting assy kit (no A.V.R.)	1
20	E000–24602/1P	A.V.R. SX460 (standard)	1
	E000–24608/1P	A.V.R. SX460 UL approved	1
	E000–24403/1P	A.V.R. AS440	1
	E000–24408/1P	A.V.R.AS440 UL approved	1
21	45–0118	Heater 110–120v	1
	45–0117	Heater 220–260v	1
22	45–0024	Heater terminal box (for retrofit)	1
23	45–0830	D.E. Adaptor S.A.E 2	1
	45–0756	D.E. Adaptor S.A.E 3	1
	45–0723	D.E. Adaptor S.A.E 4	1
	45–0813	D.E. Adaptor S.A.E 5	1
	45–0725	D.E. Adaptor S.A.E 6	1
24	130–21325	D.E. Screen S.A.E2/4/5	2

Copyright © 2016 Cummins Generator Technologies. All Rights Reserved.

BCA164 & BCI164 1 Bearing (4 Pole) (Continued)

Item	Part No.	Description	Qty
25	130–20685	D.E. Screen S.A.E 3	2
26	45–0743	Coupling Kit S.A.E 6.5 (for S.A.E 4 & 5)	1
	45–0748	Coupling Kit S.A.E 6.5 (for S.A.E 6)	1
	45–0744	Coupling Kit S.A.E 7.5 (for S.A.E 4 & 5)	1
	45–0749	Coupling Kit S.A.E 7.5 (for S.A.E 6)	1
	45–0745	Coupling Kit S.A.E 8 (for S.A.E 4 & 5)	1
	45–0772	Coupling Kit S.A.E 8 (for S.A.E 3)	1
	45–0750	Coupling Kit S.A.E10 (for S.A.E2)	1
	45–0773	Coupling Kit S.A.E 10 (for S.A.E 3)	1
	45–0746	Coupling Kit S.A.E 10 (for S.A.E 4)	1
	45–0775	Coupling Kit S.A.E 11.5 (for S.A.E 2)	1
	45–0774	Coupling Kit S.A.E 11.5 (for S.A.E 3)	1
	45–0751	Coupling Kit lister tx 2 & 3	1
	45–0857	Coupling Kit (light fly wheel)	1
27	45–0726	Fan S.A.E 3 & 4	1
	45–0727	Fan S.A.E 5 & 6	1

Copyright © 2016 Cummins Generator Technologies. All Rights Reserved.

This page is Intentionally blank.

Copyright © 2016 Cummins Generator Technologies. All Rights Reserved.

BCA164 & BCI164 A To E 2 Bearing (4 Pole)

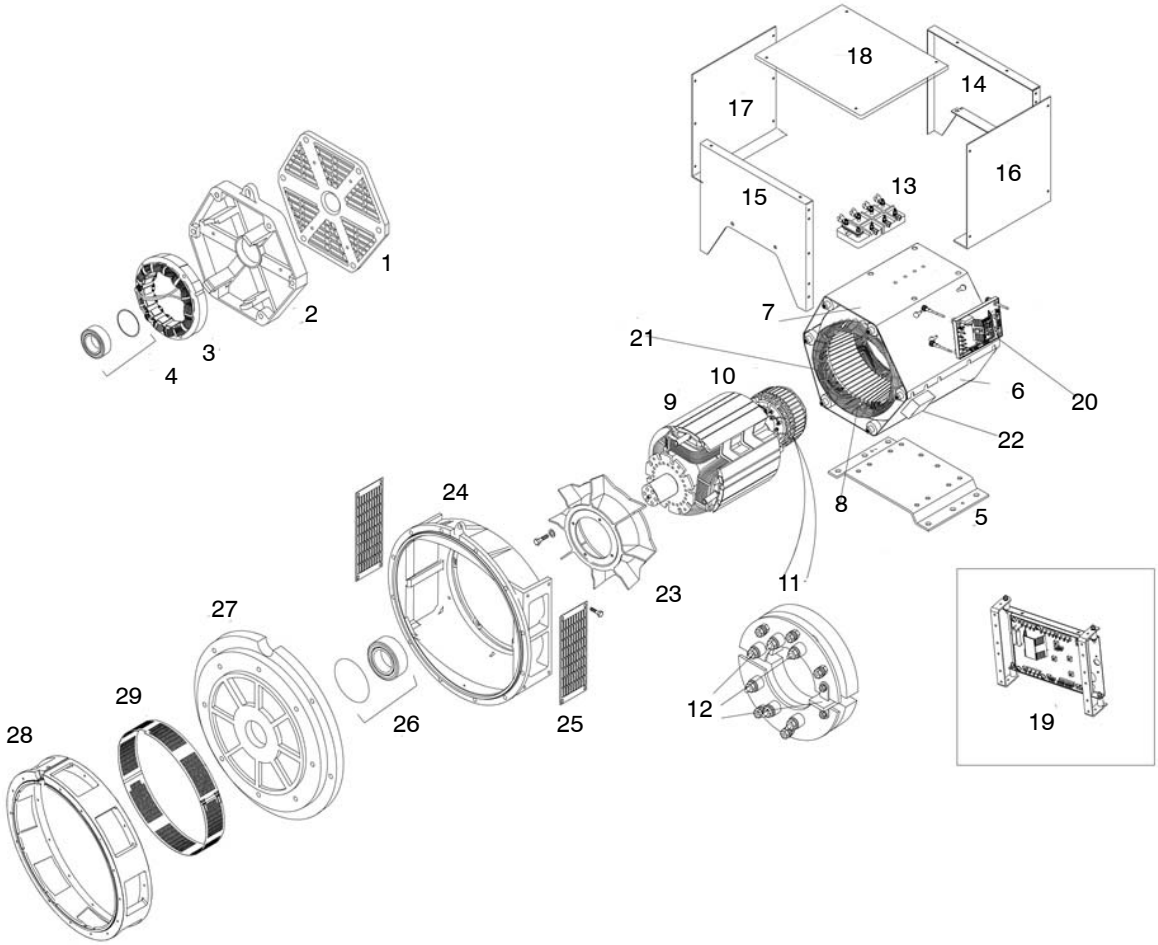

Copyright © 2016 Cummins Generator Technologies. All Rights Reserved.

BCA164 & BCI164 A To E 2 Bearing (4 Pole)

Item	Part No.	Description	Qty
1	130–20661	N.D.E. Cover	1
2	130–20667	N.D.E. Bracket	1
3	130–1380	Exciter stator bcl164 (25mm) A – D	1
4	45–0866	N.D.E. Bearing Kit	1
5	130–20830	Foot	1
6	130–20745	Frame cover bottom A – B	1
	130–20834	Frame cover bottom C – D	1
	130–20802	Frame cover bottom E	1
7	130–22002	Frame cover top A – B	2
	130–22003	Frame cover top C – D	1
	130–22004	Frame cover top E	1
8	QMSN	Main stator bar assembly	1
9	QMSN	Main rotor shaft assembly	1
10	130–1385	Exciter rotor (25mm) A – D	1
11	45–0427	Rectifier assembly	1
12	RSK–1101	Diode Fwd/Rev & Varistor Kit	1
13	130–22000	Main terminal panel from (30/10/05)	1
14	130–22008	N.D.E. Terminal panel from 30/10/05	1
15	130–22008	D.E. Terminal panel from 30/10/05	2
16	130–20820	Side panel (A.V. R.) to 30/10/05	1
	130–20993	Side panel (A.V. R.) from 30/10/05	1
17	130–20819	Side panel	1
18	130–20821	Terminal box lid	1
19	45–0755	A.V. R. Mounting assy kit (no AVR)	1
20	E000–24602/1P	A.V. R. SX460 (standard)	1
	E000–24608/1P	A.V. R. SX460 UL approved	1
	E000–24403/1P	A.V. R. AS440	1
	E000–24408/1P	A.V. R. AS440 UL approved	1
21	45–0195	Heater 110–120v	1
	45–0194	Heater 220–260v	1
22	45–0024	Heater terminal box (for retrofit)	1
23	45–0727	Fan SAE 5 & 6	1
24	130–21602	D.E. Adaptor bracket SAE 5	1
25	130–21325	D.E. Screen	2
26	45–0363	D.E. Bearing Kit	1
27	130–20773	D.E. Endbracket	1
28	45–0719	Adaptor Kit SAE 2	1
	45–0619	Adaptor Kit SAE 3	1
	45–0620	Adaptor Kit SAE 4	1
	45–0621	Adaptor Kit SAE 5	1
29	SEE ITEM 28	Adaptor screen included in adaptor kit	1

Copyright © 2016 Cummins Generator Technologies. All Rights Reserved.

BCL164 & 184 A – F 1 Bearing (4 Pole)

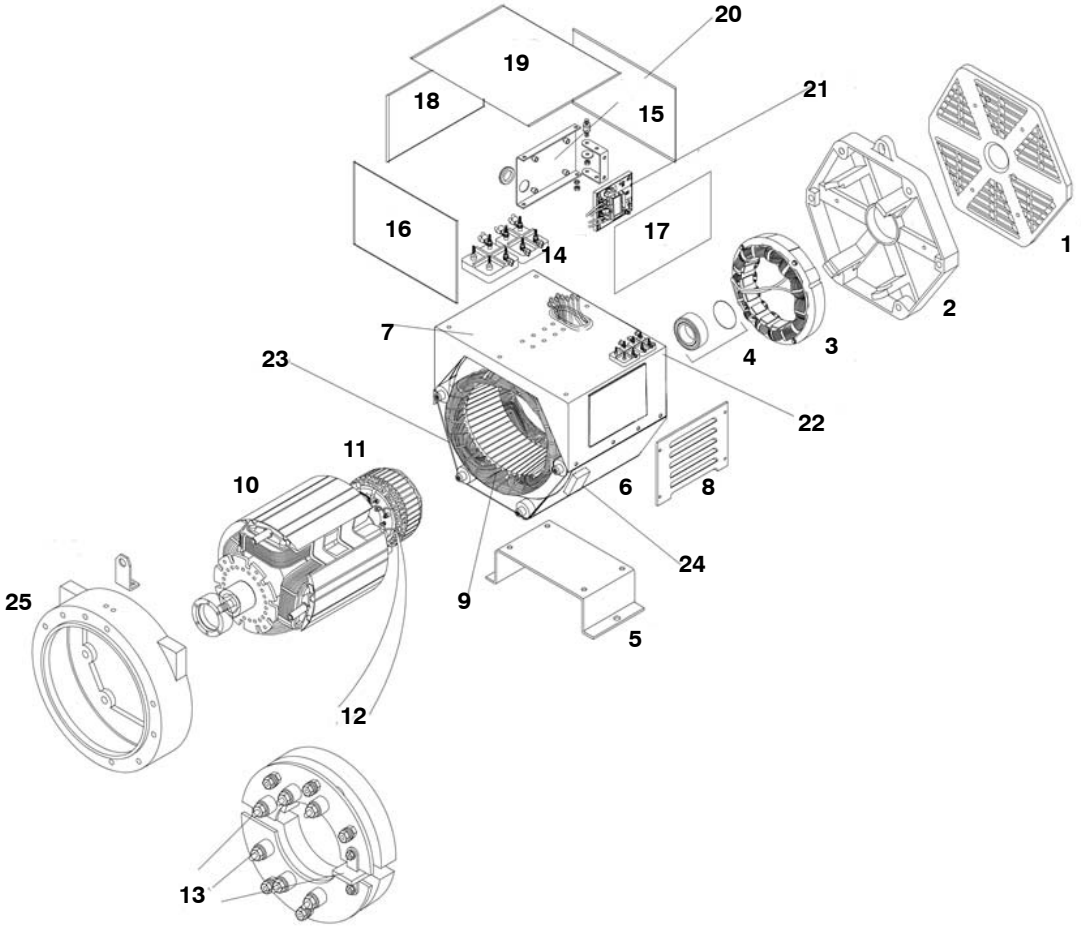

Copyright © 2016 Cummins Generator Technologies. All Rights Reserved.

BCL164 & 184 A – F 1 Bearing (4 Pole)

Item	Part No.	Description	Qty
1	130–20661	N.D.E. Louvred cover	1
2	130–20667	N.D.E. Bracket	1
3	130–1380	Exciter stator bcl164 (25mm) A – D	1
	130–1381	Exciter stator bcl184 (30mm) E	1
	130–1383	Exciter stator bcl184 (40mm) F	1
4	45–0866	N.D.E. Bearing kit	1
5	130–20832	Foot	1
6	130–20745	Frame cover bottom bcl164 A – B	1
	130–10834	Frame cover bottom bcl164 C – D	1
	130–20802	Frame cover bottom bcl184 E	1
	130–20786	Frame cover bottom bcl184 F	1
7	130–20998	Frame cover top bcl164 A – B	1
	130–20999	Frame cover top bcl164 C – D	1
	130–21000	Frame cover top bcl184 E	1
	130–21001	Frame cover top bcl184 F	1
8	130–20318	Louvred cover	2
9	QMSN	Main stator bar assembly	1
10	QMSN	Main rotor shaft assembly	1
11	130–1385	Exciter rotor bcl164 (25mm) A – D	1
	130–1386	Exciter rotor bcl184 (30mm) E	1
	130–1388	Exciter rotor bcl184 (40mm) F	1
12	45–0427	Rectifier assembly	1
13	RSK–1101	Diode Fwd/Rev & Varistor Kit	1
14	130–22000	Main terminal panel	1
15	130–21003	N.D.E. Terminal panel	1
16	130–21003	D.E. Terminal panel	1
17	130–21005	Side panel AVR	1
18	130–21004	Side panel	1
19	130–21006	Terminal box lid	1
20	45–0918	A.V.R. Mounting assy kit (no AVR)	1
21	E000–24602/1P	A.V.R. SX460 (standard)	1
	E000–24608/1P	A.V.R. SX460 ULapproved	1
	E000–24403/1P	A.V.R. AS440	1
	E000–24408/1P	A.V.R. AS440 ULapproved	1
22	003–14046	Auxiliary Terminal Board	1
23	45–0195	Heater 110–120v	1
	45–0194	Heater 220–260v	1
24	45–0024	Heater terminal box (for retrofit)	1
25	130–20308	D.E. Bracket	1

Copyright © 2016 Cummins Generator Technologies. All Rights Reserved.

BCA182 & BCI182 H TO K 1 Bearing (2 Pole)

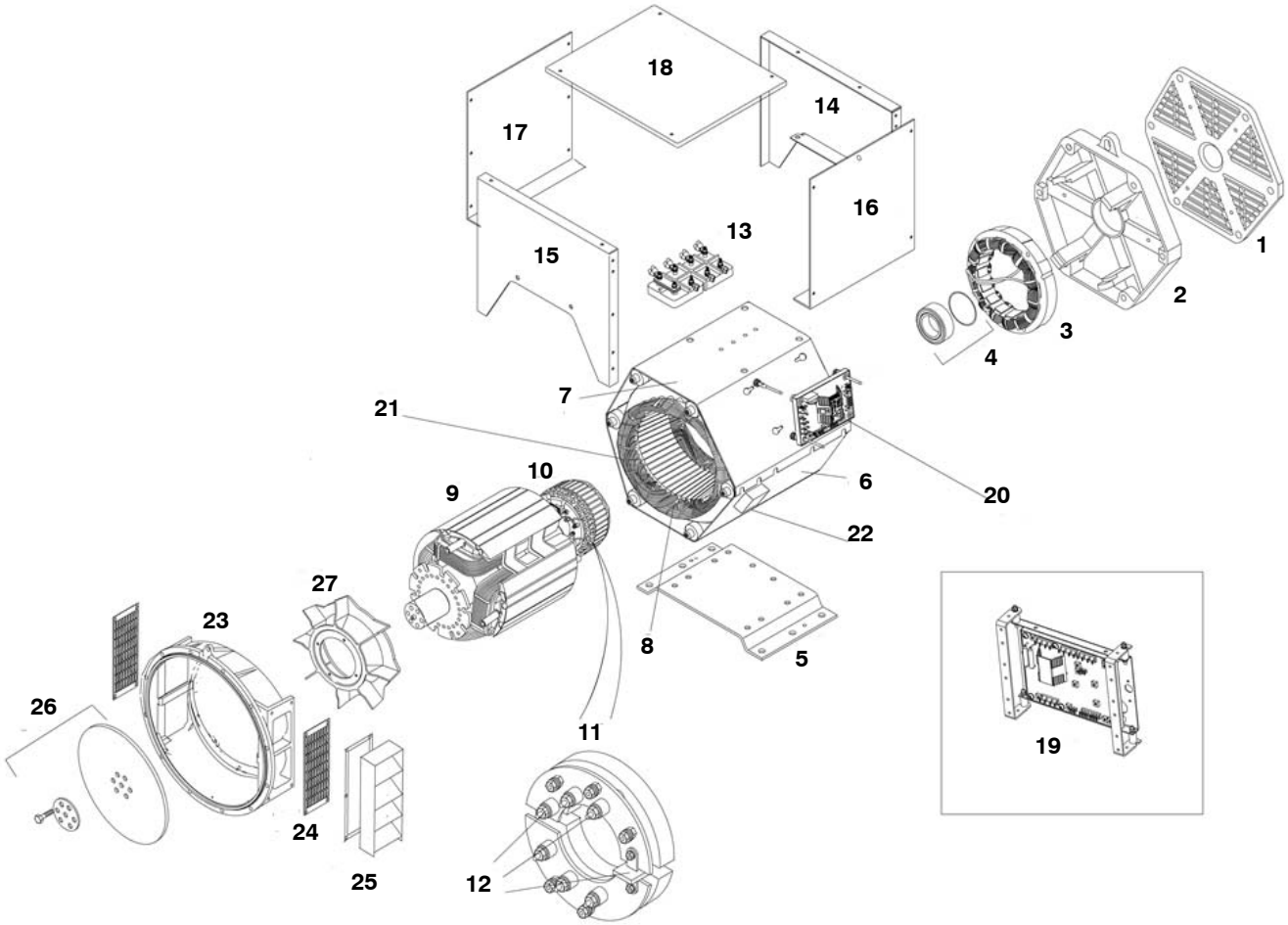

Copyright © 2016 Cummins Generator Technologies. All Rights Reserved.

BCA182 & BCI182 H TO K 1 Bearing (2 Pole)

Item	Part No.	Description	Qty
1	130–20661	N.D.E. Cover	1
2	130–20667	N.D.E. Bracket	1
3	130–1380	Exciter stator (25mm) H	1
	130–1381	Exciter stator (30mm) J – I	1
4	45–0866	N.D.E. Bearing kit	1
5	130–20831	Foot	1
6	130–20836	Frame cover bottom H	1
	130–20786	Frame cover bottom K	1
7	130–22022	Frame cover top H	2
	130–22005	Frame cover top K	1
8	QMSN	Main stator bar assembly	1
9	QMSN	Main rotor shaft assembly	1
10	130–1385	Exciter rotor (25mm) H	1
	130–1386	Exciter rotor (30mm) J – I	1
11	45–0427	Rectifier assembly	1
12	RSK–1101	Diode Fwd/Rev & Varistor Kit	1
13	130–22000	Main terminal panel	1
14	130–22008	N.D.E. Terminal panel	1
15	130–22008	D.E. Terminal panel	2
16	130–20820	Side panel (A.V.R.) to (30/10/05) AVM type	1
	130–20993	Side panel (A.V.R.) from (30/10/05)	1
17	130–20819	Side panel	1
18	130–20821	Terminal box lid	1
19	45–0755	A.V.R. Mounting assy kit (no AVR)	1
20	E000–24602/1P	A.V.R. SX460 (standard)	1
	E000–24608/1P	A.V.R. SX460 UL approved	1
	E000–24403/1P	A.V.R. AS440	1
	E000–24408/1P	A.V.R. AS440 UL approved	1
21	45–0118	Heater 110–120v	1
	45–0117	Heater 220–260v	1
22	45–0024	Heater terminal box (for retrofit)	1
23	45–0830	D.E. Adaptor SAE 2	1
	45–0756	D.E. Adaptor SAE 3	1
	45–0723	D.E. Adaptor SAE 4	1
	45–0813	D.E. Adaptor SAE 5	1
	45–0725	D.E. Adaptor SAE 6	1
24	130–21325	D.E. Screen SAE 2/4/5	2
25	130–20685	D.E. Screen SAE 3	2
26	45–0743	Coupling Kit SAE 6.5 (for SAE 4 & 5)	1
	45–0748	Coupling Kit SAE 6.5 (for SAE 6)	1
	45–0744	Coupling Kit SAE 7.5 (for SAE 4 & 5)	1

Copyright © 2016 Cummins Generator Technologies. All Rights Reserved.

BCA182 & BCI182 H TO K 1 Bearing (2 Pole) (Continued)

Item	Part No.	Description	Qty
	45–0749	Coupling Kit SAE 7.5 (for SAE 6)	1
	45–0745	Coupling Kit SAE 8 (for SAE 4 & 5)	1
	45–0772	Coupling Kit SAE 8 (for SAE 3)	1
	45–0750	Coupling Kit SAE 10 (for SAE 2)	1
	45–0773	Coupling Kit SAE 10 (for SAE 3)	1
	45–0746	Coupling Kit SAE 10 (for SAE 4)	1
	45–0775	Coupling Kit SAE 11.5 (for SAE 2)	1
	45–0774	Coupling Kit SAE 11.5 (for SAE 3)	1
	45–0751	Coupling Kit lister tx 2 & 3	1
27	45–0726	Fan (SAE 3 & 4)	1
	45–0727	Fan (SAE 5 & 6)	1

Copyright © 2016 Cummins Generator Technologies. All Rights Reserved.

This page is Intentionally blank.

Copyright © 2016 Cummins Generator Technologies. All Rights Reserved.

BCA182 & BCI182 H TO K 2 Bearing (2 Pole)

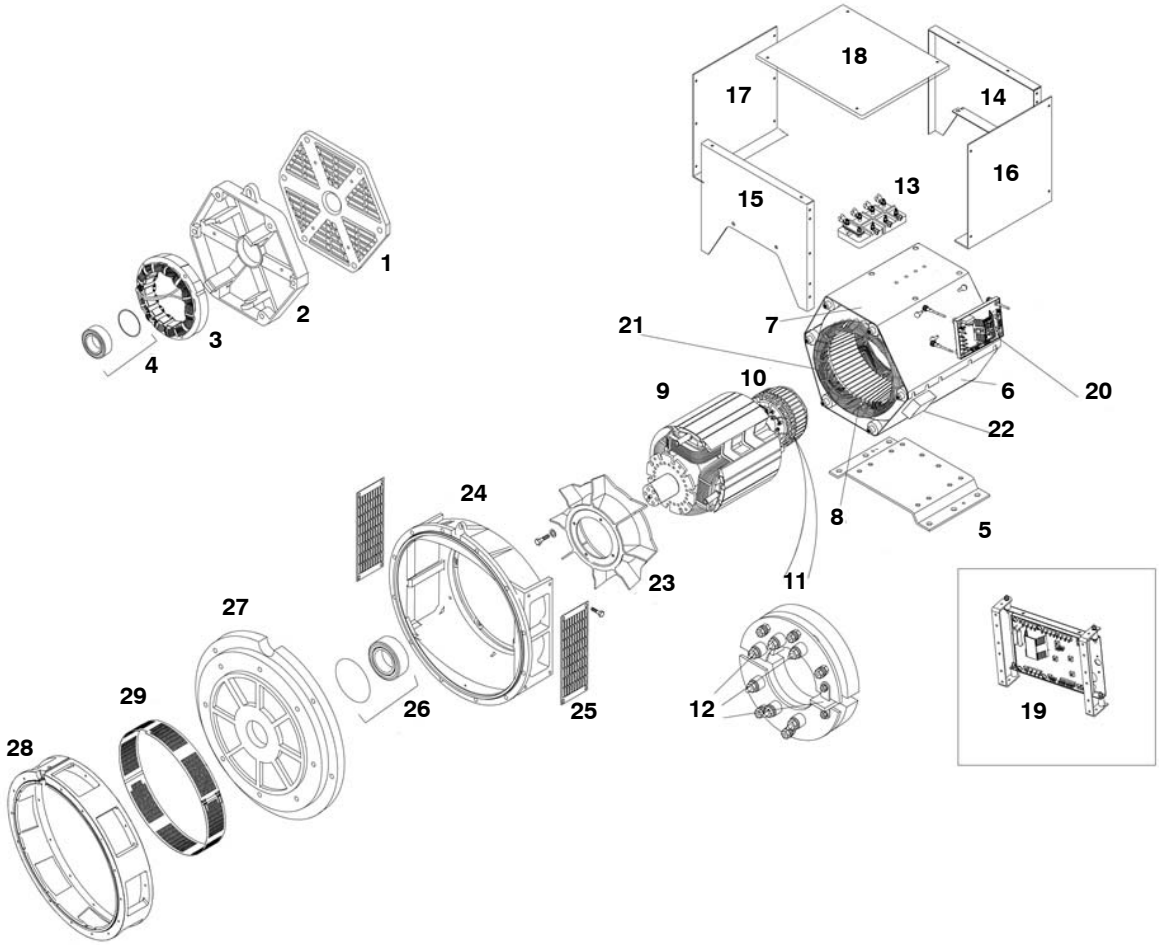

Copyright © 2016 Cummins Generator Technologies. All Rights Reserved.

BCA182 & BCI182 H TO K 2 Bearing (2 Pole)

Item	Part No.	Description	Qty
1	130–20661	N.D.E. Cover	1
2	130–20667	N.D.E. Bracket	1
3	130–1380	Exciter stator (25mm) H	1
	130–1381	Exciter stator (30mm) J– I	1
4	45–0866	N.D.E. Bearing kit	1
5	130–20831	Foot	1
6	130–20836	Frame cover bottom H	1
	130–20786	Frame cover bottom K	1
7	130–22022	Frame cover top H	1
	130–22005	Frame cover top K	1
8	QMSN	Main stator bar assembly	1
9	QMSN	Main rotor shaft assembly	1
10	130–1385	Exciter rotor (25mm) H	1
	130–1386	Exciter rotor (30mm)j – I	1
11	45–0427	Rectifier assembly	1
12	RSK–1101	Diode Fwd/Rev & Varistor Kit	1
13	130–22000	Main terminal panel	1
14	130–22008	N.D.E. Terminal panel	1
15	130–22008	N.D.E. Terminal panel	1
16	130–20820	Side panel (A,V.R.) to (30/10/05) AVM type	1
	130–20993	Side panel (A,V.R.) from (30/10/05)	1
17	130–20819	Side panel	1
18	130–20821	Terminal box lid	1
19	45–0755	A.V.R. Mounting assy kit (no A.V.R.)	1
20	E000–24602/1P	A.V.R. SX460 (standard)	1
	E000–24608/1P	A.V.R. SX460 UL approved	1
	E000–24403/1P	A.V.R. AS440	1
	E000–24408/1P	A,V.R. AS440 UL approved	1
21	45–0118	Heater 110–120v	1
	45–0117	Heater 220–260v	1
22	45–0024	Heater terminal box (for retrofit)	1
23	45–0726	Fan SAE 3 & 4	1
24	130–20928	D.E. Adaptor bracket SAE 4	1
25	130–21325	D.E. Screen	2
26	45–0363	D.E. Bearing kit	1
27	130–20774	D.E. Endbracket	1
28	45–0719	Adaptor Kit SAE 2	1
	45–0619	Adaptor Kit SAE 3	1
	45–0620	Adaptor Kit SAE 4	1
	45–0621	Adaptor Kit SAE 5	1
29	SEE ITEM 28	Adaptor screen included in Adaptor kit	1

Copyright © 2016 Cummins Generator Technologies. All Rights Reserved.

BCI184 1 Bearing (4 Pole)

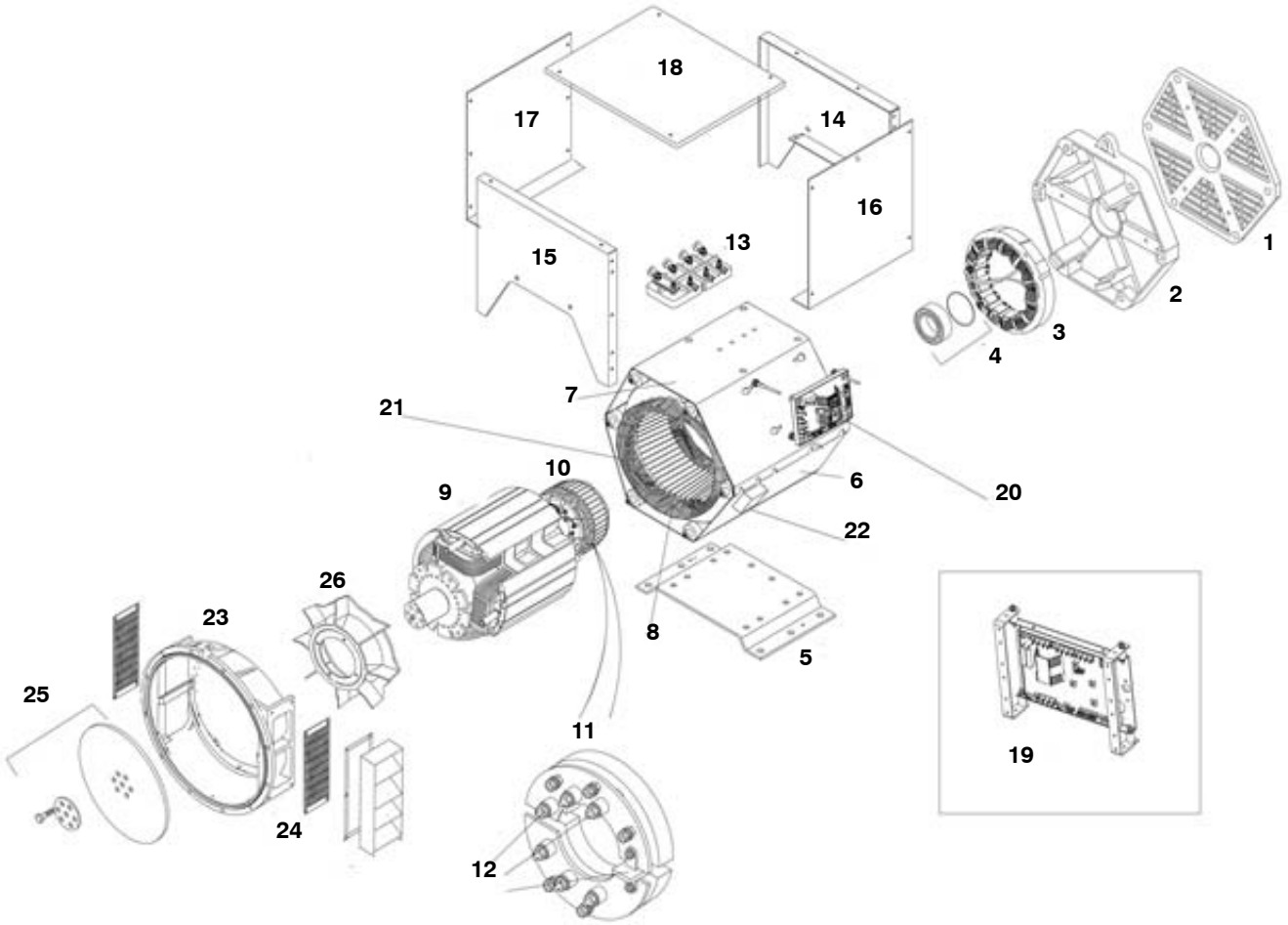

Copyright © 2016 Cummins Generator Technologies. All Rights Reserved.

BCI184 1 Bearing (4 Pole)

Item	Part No.	Description	Qty
1	130–20661	N.D.E. Cover	1
2	130–20667	N.D.E. Bracket	1
3	130–1381	Exciter stator (30mm) E	1
	130–1383	Exciter stator (40mm) F – G	1
	130–1801	Exciter stator H–J core only	1
4	45–0866	N.D.E. Bearing kit	1
5	130–20832	Foot	1
6	130–20802	Frame cover bottom E	1
	130–20786	Frame cover bottom F – G	2
7	130–22004	Frame cover top E	1
	130–22005	Frame cover top F – G	1
8	QMSN	Main stator bar assembly	1
9	QMSN	Main rotor shaft assembly	1
10	130–1386	Exciter rotor (30mm) E	1
	130–1388	Exciter rotor (40mm) F – G	1
	130–1800	Exciter rotor H–J core only	1
11	45–0427	Rectifier assembly	1
12	RSK–1101	Diode Fwd/Rev & Varistor Kit	1
13	130–22000	Main terminal panel from (30/10/05)	2
14	130–22008	N.D.E. Terminal panel	1
15	130–22008	D.E. Terminal panel	1
16	130–20820	Side panel (A.V.R.) to 30/10/05	1
	130–20993	Side panel (A.V.R.) from 30/10/05	1
	130–22011	Side panel (A.V.R) H – J core	1
17	130–20819	Side panel	1
	130–21627	Side panel H – J core	1
18	130–20821	Terminal box lid	1
	130–21628	Terminal box lid H – J core	1
19	45–0755	A.V.R. Mounting assy kit (no AVR)	1
20	E000–24602/1P	A.V.R. SX460 (standard)	1
	E000–24608/1P	A.V.R. SX460 ULapproved	1
	E000–24403/1P	A.V.R. AS440	1
	E000–24408/1P	A.V.R. AS440 ULapproved	1
21	45–0195	Heater 110–120v	2
	45–0194	Heater 220–260v	1
22	45–0024	Heater terminal box (for retrofit)	1
23	45–0830	D.E. Adaptor SAE 2	1
	45–0756	D.E. Adaptor SAE 3	1
	45–0723	D.E. Adaptor SAE 4	1
	45–0813	D.E. Adaptor SAE 5	1
	45–0725	D.E. Adaptor SAE 6	1

Copyright © 2016 Cummins Generator Technologies. All Rights Reserved.

BCI184 1 Bearing (4 Pole) (Continued)

Item	Part No.	Description	Qty
	45–0527	Adaptor SAE3 – H–J core only	1
24	130–21325	D.E. Screen SAE2/4/5	1
	130–20685	D.E. Screen SAE 3	1
25	45–0743	Coupling Kit SAE 6.5 (for SAE 4 & 5)	1
	45–0748	Coupling Kit SAE 6.5 (for SAE 6)	1
	45–0744	Coupling Kit SAE 7.5 (for SAE 4 & 5)	1
	45–0749	Coupling Kit SAE 7.5 (for SAE 6)	1
	45–0745	Coupling Kit SAE 8 (for SAE 4 & 5)	1
	45–0772	Coupling Kit SAE 8 (for SAE 3)	1
	45–0750	Coupling Kit SAE10 (for SAE2)	1
	45–0773	Coupling Kit SAE 10 (for SAE 3)	2
	45–0746	Coupling Kit SAE 10 (for SAE 4)	1
	45–0775	Coupling Kit SAE 11.5 (for SAE 2)	1
	45–0774	Coupling Kit SAE 11.5 (for SAE 3)	1
	45–0751	Coupling Kit lister tx 2 & 3	1
26	45–0726	Fan (SAE 3 & 4)	1
	45–0727	Fan (SAE 5 & 6)	1

Copyright © 2016 Cummins Generator Technologies. All Rights Reserved.

This page is Intentionally blank.

Copyright © 2016 Cummins Generator Technologies. All Rights Reserved.

BCI184 2 Bearing (4 Pole)

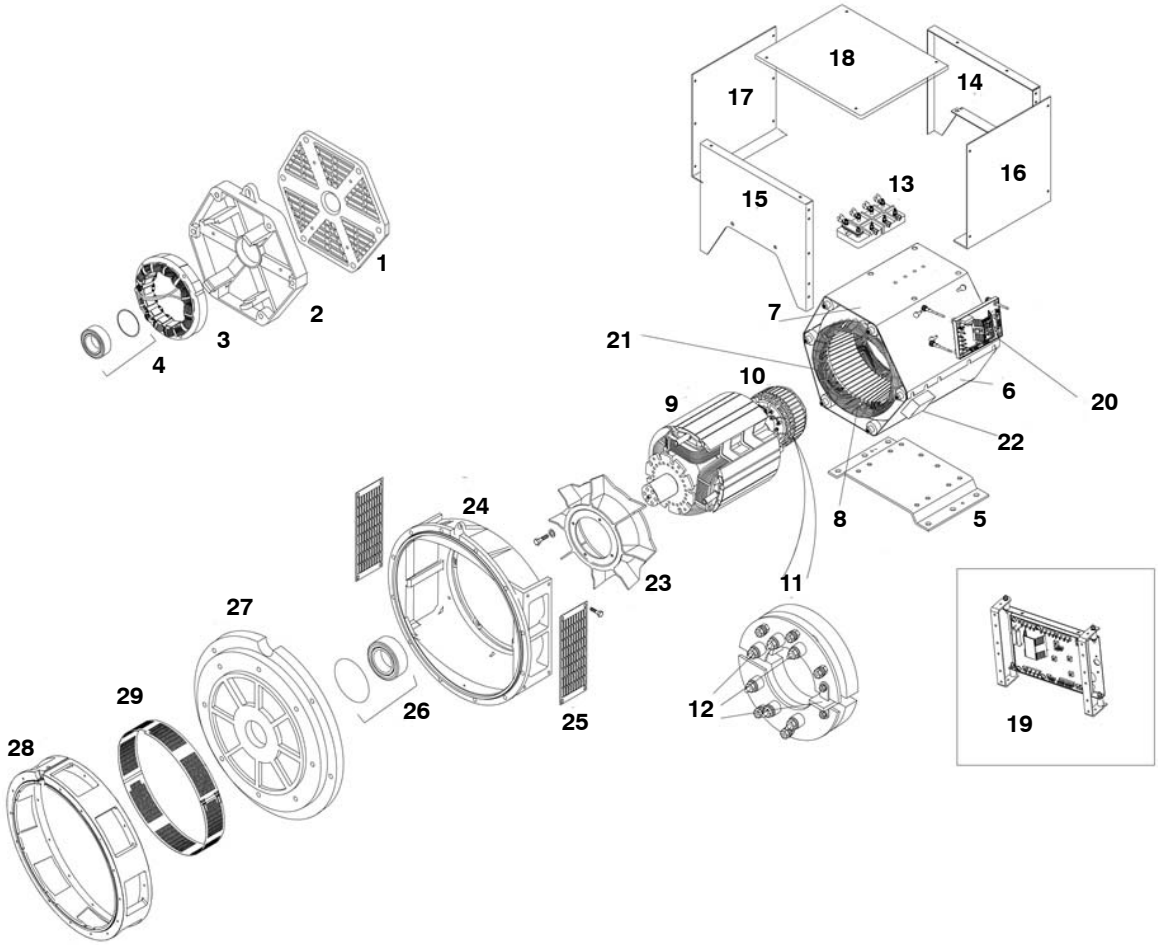

Copyright © 2016 Cummins Generator Technologies. All Rights Reserved.

BCI184 2 Bearing (4 Pole)

Item	Part No.	Description	Qty
1	130–20661	N.D.E, Cover	1
2	130–20667	N.D.E, Bracket	1
3	130–1381	Exciter stator (30mm) E	1
	130–1383	Exciter stator (40mm) F– G	1
	130–1801	Exciter stator H–J core only	1
4	45–0866	N.D.E, Bearing kit	1
5	130–20832	Foot	1
6	130–20802	Frame cover bottom E	1
	130–20786	Frame cover bottom F – G	1
7	130–22004	Frame cover top E	1
	130–22005	Frame cover top F – G	1
8	QMSN	Main stator bar assembly	1
9	QMSN	Main rotor shaft assembly	1
10	130–1386	Exciter rotor (30mm) E	1
	130–1388	Exciter rotor (40mm) F – G	1
	130–1800	Exciter rotor H–J core only	1
11	45–0427	Rectifier assembly	1
12	RSK–1101	Diode Fwd/Rev & Varistor Kit	1
13	130–20916	Main terminal panel to (30/10/05)	2
	130–22000	Main terminal panel from (30/10/05)	1
14	130–22008	N.D.E, Terminal panel	1
15	130–22008	D.E, Terminal panel	1
16	130–20820	Side panel (A.V.R.) to 30/10/05	1
	130–20993	Side panel (A.V.R.) from 30/10/05	1
	130–22011	Side panel (A.V.R) H – J core	1
17	130–20819	Side panel	1
	130–21627	Side panel H – J core	1
18	130–20821	Terminal box lid	1
	130–21628	Terminal box lid H – J core	1
19	45–0755	A.V.R. Mounting assy kit (no A.V.R.)	1
20	E000–24602/1P	A.V.R. SX460 (standard)	1
	E000–24608/1P	A.V.R. SX460 UL approved	1
	E000–24403/1P	A.V.R. AS440	1
	E000–24408/1P	A.V.R. AS440 UL approved	1
21	45–0195	Heater 110–120v	1
	45–0194	Heater 220–260v	1
22	45–0024	Heater terminal box (for retrofit)	1
23	45–0726	Fan SAE 3 & 4	1
24	130–20928	D.E, Adaptor bracket SAE 4	1
25	130–21325	D.E, Screen	2
26	45–0363	D.E, Bearing kit	1

Copyright © 2016 Cummins Generator Technologies. All Rights Reserved.

BCI184 2 Bearing (4 Pole) (Continued)

Item	Part No.	Description	Qty
27	130–20774	D.E, Endbracket	1
28	45–0719	Adaptor Kit SAE 2	1
	45–0619	Adaptor Kit SAE 3	1
	45–0620	Adaptor Kit SAE 4	1
	45–0621	Adaptor Kit SAE 5	1
29	SEE ITEM 28	Adaptor screen included in adaptor kit	1

Copyright © 2016 Cummins Generator Technologies. All Rights Reserved.

This page is Intentionally blank.

Copyright © 2016 Cummins Generator Technologies. All Rights Reserved.

UCD22–27 1 Bearing (4 Pole)

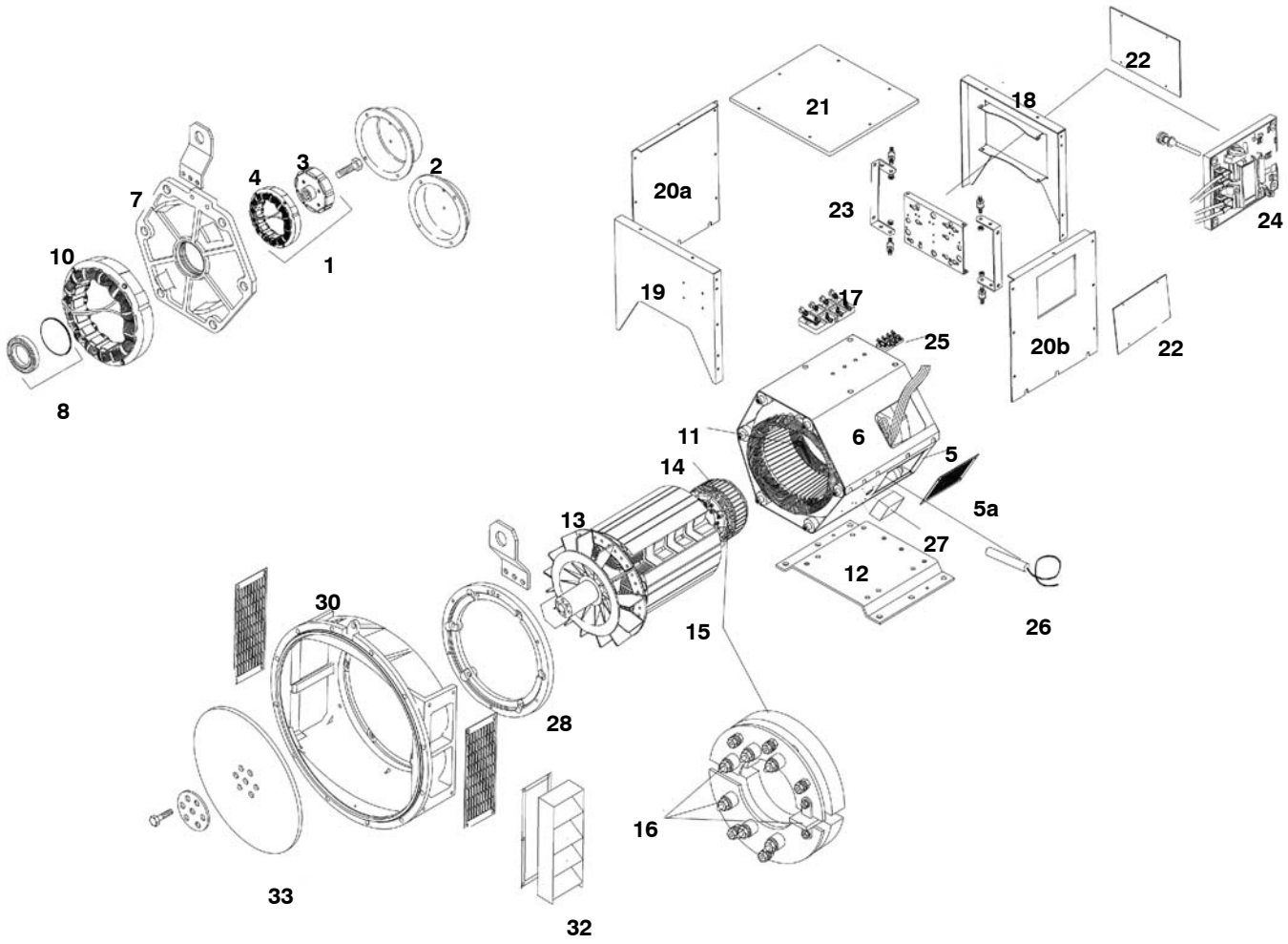

Copyright © 2016 Cummins Generator Technologies. All Rights Reserved.

UCD22–27 1 Bearing (4 Pole)

Item	Part No.	Description	Qty
1	45–0075A	Complete P.M.G. upfit kit	1
2	450–14360	P. M.G. C (Cover included in above kit)	1
	450–14450	NON PMG Cover	1
3	45–1080	Current P. M.G. Rotor/Stator Repair Kit	1
4	45–1080	Current P .M.G. Rotor/Stator Repair Kit	1
5	330–10386	Main stator bottom cover C–D	1
	330–10387	Main stator bottom cover E–F	1
	330–10388	Main stator bottom cover G	1
	330–10389	Main stator bottom cover H	1
5a	330–10020	Air inlet cover	2
	330–10099	Air inlet cover (Airfilter)	2
6	330–10381	Main stator top cover C–D	1
	330–10382	Main stator top cover E–F	1
	330–10383	Main stator top cover G	1
	330–10384	Main stator top cover H	1
7	330–10002	N.D.E. Bracket	1
	330–10258	N.D.E. Bracket (for use with brg rtd's)	
8	45–0868	N.D.E. Bearing Kit	1
10	230–1497	Exciter stator C – D (40mm)	1
	330–1280	Exciter stator E – H (60mm)	1
11	QMSN	Main stator bar assy	1
12	330–10137	Foot	1
13	QMSN	Main rotor assy	2
14	210–1037	Exciter rotor C – D 40mm	1
	310–1028	Exciter rotor E – G 60mm	1
15	45–0428	Rotating rectifier assy	1
16	RSK–2001	Diode Fwd/Rev & Varistor Kit	1
17	450–15617	Main terminal board	1
18	330–10622	Terminal box endpanel N.D.E. (Plain) & ENC500	1
	330–10602	Terminal box endpanel N.D.E. (Access) & ENC500	1
	330–10634	Terminal box endpanel N.D.E. (Plain) (Low profile)	1
19	330–10601	Terminal box endpanel D.E. (Plain) & ENC500	1
	330–10630	Terminal box endpanel D.E. (Access)	1
	330–10634	Terminal box endpanel D.E. (Plain) (LOW PROFILE)	1
20a	330–10603	Terminal box side panel (Left hand) (Plain) & ENC500	1
	330–10617	Terminal box side panel (Left hand) (Access) & ENC500	1
	330–10605	Terminal box side panel (Left hand) (Airfilter) & ENC500	1
	330–10600	Terminal box side panel (Left hand) (Low profile)	1
	330–10613	Terminal box side panel (Vent) (Plain) (Left hand) & ENC500 J–K Core only	1
	330–10620	Terminal box side panel (Vent) (Aperture) (Left hand) & ENC500 J–K Core only	1
	330–10611	Terminal box side panel (Vent) (Glandplate) (Left hand) & ENC500 J–K Core only	1

Copyright © 2016 Cummins Generator Technologies. All Rights Reserved.

UCD22–27 1 Bearing (4 Pole) (Continued)

Item	Part No.	Description	Qty
20b	330–10609	Terminal box side panel (Right hand) (Plain) & ENC500	
	330–10615	Terminal box side panel (Right hand) (Airfilter) & ENC500	1
	330–10606	Terminal box side panel (Right hand) (Airfilter) (Aperture) & ENC500	1
	330–10636	Terminal box side panel (Right hand) (Aperture) (Low profile)	1
	330–10614	Terminal box side panel (Vent) (Plain) (Right hand) & ENC500 J–K Core only	1
	330–10612	Terminal box side panel (Vent) (Aperture) (Right hand) & ENC500 J– K Core only	1
21	330–10069	Terminal box lid	1
22	450–14310	A.V .R. Cover plate to (28/11/04)	1
	410–10536	A.V. R. Cover plate from (28/11/04)	1
23	45–0742	A.V .R. Mounting bracke T	1
24	E000–23412/1P	A.V.R. MX341 (Standard Series 3	1
	E000–23408	A.V.R. MX341 UL	1
	E000–23212/1P	A.V.R. MX321 (Series 3)	1
	E000–23215	A.V.R. MX321 UL	1
	E000–24403/1P	A.V.R. AS440 (Standard Series 4)	1
	E000–24408/1P	A.V.R. AS440 UL Approved	1
	E000–24602/1P	A.V.R. SX460 (Standard Series 6)	1
	E000–24608/1P	A.V.R. SX460 UL Approved	1
	E000–24210/1P	A.V.R. SX421	1
25	450–15489	6 Way Terminal block	2
26	45–0118	Heater 110–125 Volt	1
	A040G630	Heater Kit 110–125 V to include term box for retrofit	1
	45–0117	Heater 220–260 Volt	1
27	45–0024	Terminal box for heaters	1
28	230–10001	D.E. Adaptor ring	1
30	45–0850	UCD22 Adaptor Kit SAE 3	1
	45–0851	UCD27 Adaptor Kit SAE 2	1
	45–0852	UCD27 Adaptor Kit SAE 1	1
33	45–0839	UCD 22 Couplng Kit SAE 10	1
	45–0840	UCD 22 Couplng Kit SAE 11.5	1
	45–0768	UCD 27 Coupling Kit SAE 11.5	1
	45–0766	UCD 27 Coupling Kit SAE 14	1
		NOTE: If the first position of the alternator serial number is M, the replacements for the rotor and stator are no longer available. Please contact the factory Technical Support for more information.	

Copyright © 2016 Cummins Generator Technologies. All Rights Reserved.

This page is Intentionally blank.

Copyright © 2016 Cummins Generator Technologies. All Rights Reserved.

UCI224 – 1 Bearing

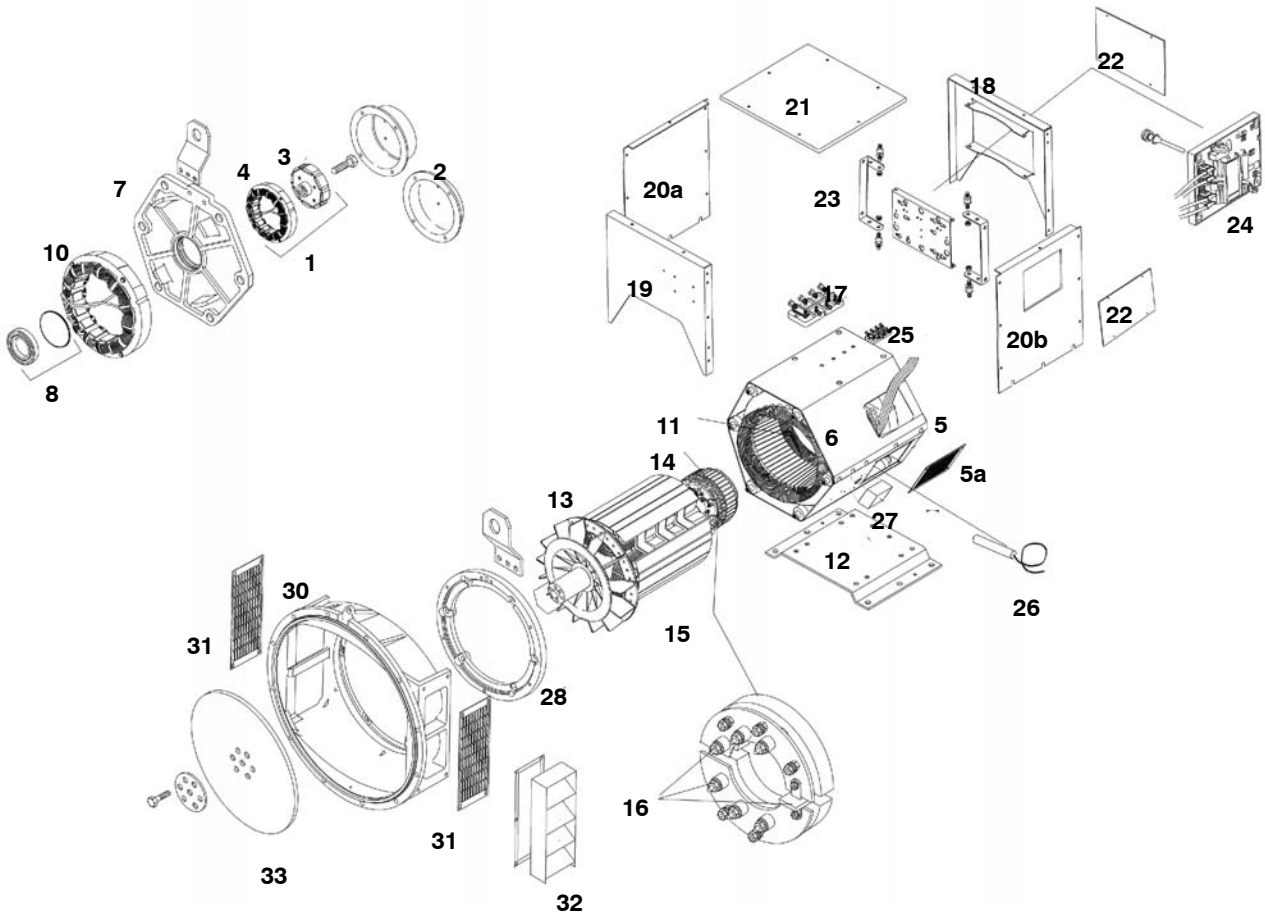

Copyright © 2016 Cummins Generator Technologies. All Rights Reserved.

UCI224 – 1 Bearing

Item	Part No.	Description	Qty
1	45–0075A	Complete P.M.G. upfit kit	1
2	450–14360	P.M.G. cover (cover included in above kit)	1
	450–14450	NON PMG Cover	1
3	45–1080	Current P.M.G. rotor/stator repair kit	1
4	45–1080	Current P.M.G. rotor/stator repair kit	1
5	230–10340	Main stator bottom cover C–D	1
	230–10341	Main stator bottom cover E–F	1
	230–10342	Main stator bottom cover G	1
5a	230–10054	Air inlet cover	2
6	230–10336	Main stator top cover C–D	1
	230–10337	Main stator top cover E–F	1
	230–10338	Main stator top cover G	1
7	230–10002	N.D.E Bracket	1
8	45–0867	N.D.E Bearing kit	1
10	230–1495	Exciter stator C & D 30mm	1
	230–1497	Exciter stator E F & G 40mm	1
11	QMSN	Main stator bar assy	1
12	230–10270	Foot	1
13	QMSN	Main rotor assy	2
14	210–1036	Exciter rotor C – D 30mm	1
	210–1037	Exciter rotor E – G 40mm	1
15	45–0428	Rotating rectifier assy	1
16	RSK–2001	Diode fwd/rev & varistor kit	1
17	450–15617	Main Terminal board	1
18	230–10566	Terminal box endpanel N.D.E. (access)	1
	230–10587	Terminal box endpanel N.D.E. (plain)	1
	230–10571	Terminal box endpanel N.D.E. (plain) low/profile	1
19	230–10565	Terminal box endpanel D.E. (plain)	1
	230–10599	Terminal box endpanel D.E. (access)	1
	A041H349	Terminal box endpanel D.E. (plain) low/profile	1
20a	230–10567	Terminal box side panel (left hand)	1
	230–10573	Terminal box side panel (access)	1
	230–10574	Terminal box side panel lh (plain) low profile	1
20b	230–10575	Terminal box side panel (right hand)	2
	230–10568	Terminal box side panel (access)	1
	230–10583	Terminal box side panel rh (plain) low profile	1
	230–10580	Terminal box side panel (rh series 5 trans)	1
	230–10627	Terminal box side panel (access no pfc)	1
21	230–10069	Terminal box lid	1
22	450–14310	A.V.R Cover plate to (28/11/04)	
	410–10536	A.V.R Cover plate from (28/11/04)	

Copyright © 2016 Cummins Generator Technologies. All Rights Reserved.

UC122– 1 Bearing (Continued)

Item	Part No.	Description	Qty
23	45–0742	A.V.R Mounting bracket	1
24	E000–23412/1P	A.V.R. MX341 (Standard Series 3)	1
	E000–23408	A.V.R. MX341 UL	1
	E000–23212/1P	A.V.R. MX321 (Series 3)	1
	E000–23215	A.V.R. MX321 UL	1
	E000–24403/1P	A.V.R. AS440 (Standard Series 4)	1
	E000–24408/1P	A.V.R. AS440 UL Approved	1
	E000–24602/1P	A.V.R. SX460 (Standard Series 6)	1
	E000–24608/1P	A.V.R. SX460 UL Approved	1
	E000–24210/1P	A.V.R. SX421	1
25	450–15489	6 Way Terminal block	2
26	45–0118	Heater 110–125 volt	1
	A040G630	Heater Kit 110–125 v to include term box for retrofit	1
	45–0117	Heater 220–260 volt	1
	A040G622	Heater Kit 220–260 v to include term box for retrofit	1
27	45–0024	Terminal box for heaters	1
28	230–10001	D.E. Adaptor ring	1
30	45–0689	D.E. Adaptor Kit SAE 1	1
	45–0526	D.E. Adaptor Kit SAE 2	1
	45–0527	D.E. Adaptor Kitt SAE 3	1
	45–0528	D.E. Adaptor Kit SAE 4	1
31	See No. 30	D.E. Screen (Included in Adaptor Kits)	2
32	45–0630	D.E. Louvre SAE 1 SAE 3 & SAE 4	1
	45–0631	D.E. Louvre SAE–2	1
33	45–0757	Coupling Kit SAE 8	1
	45–0758	Coupling Kit SAE 10	1
	45–0759	Coupling Kit SAE 11.5	1
	45–0760	Coupling Kit SAE 14	1
	45–0761	Coupling Kit DELCO 15.5	1
	45–0762	Coupling Kit SAE 11.5 (For SAE 1 NEW)	1

Copyright © 2016 Cummins Generator Technologies. All Rights Reserved.

This page is Intentionally blank.

Copyright © 2016 Cummins Generator Technologies. All Rights Reserved.

UCI224C to G – 2 Bearing (4 Pole)

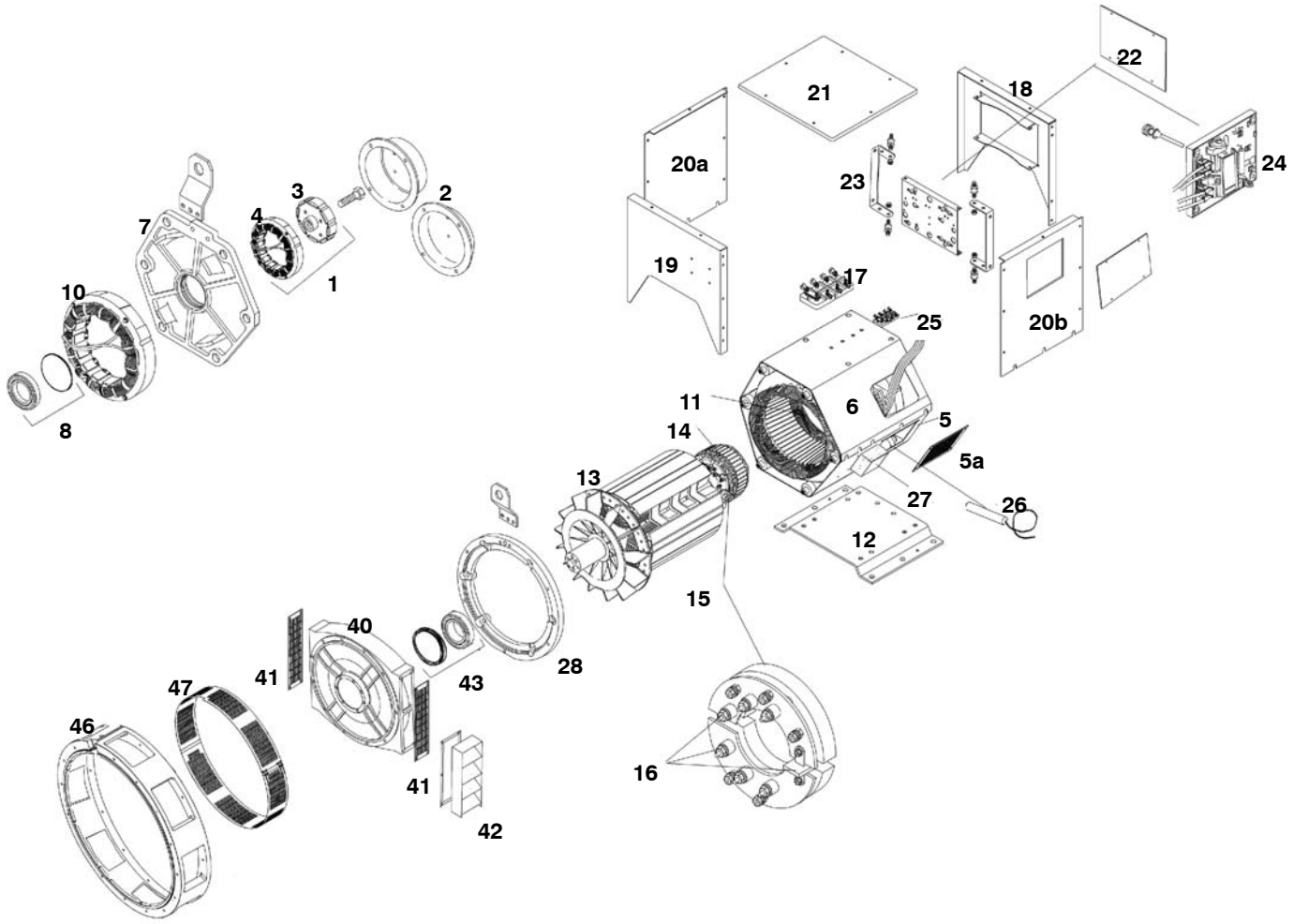

Copyright © 2016 Cummins Generator Technologies. All Rights Reserved.

UCI224C to G – 2 Bearing (4 Pole)

Item	Part No.	Description	Qty
1	45–0075A	Complete P.M.G. upfit kit	1
2	450–14360	P.M.G. cover (cover included in above kit)	1
	450–14450	NON PMG Cover	1
3	45–1080	Current P.M.G. rotor/stator repair kit	1
4	45–1080	Current P.M.G. rotor/stator repair kit	1
5	230–10340	Main stator bottom cover C–D	1
	230–10341	Main stator bottom cover E–F	1
	230–10342	Main stator bottom cover G	1
5a	230–10054	Air inlet cover	2
6	230–10336	Main stator top cover C–D	1
	230–10337	Main stator top cover E–F	1
	230–10338	Main stator top cover G	1
7	230–10002	N.D.E Bracket	1
8	45–0867	N.D.E Bearing kit	1
10	230–1495	Exciter stator C & D 30mm	1
	230–1497	Exciter rotor E – G 40mm	1
11	QMSN	Main stator bar assy	1
12	230–10270	Foot	1
13	QMSN	Main rotor assy	2
14	210–1036	Exciter rotor C – D 30mm	1
	210–1037	Exciter rotor E – G 40mm	1
15	45–0428	Rotating rectifier assy	1
16	RSK–2001	Diode fwd/rev & varistor kit	1
17	450–15617	Main Terminal board	1
18	230–10566	Terminal box endpanel N.D.E (access)	1
	230–10587	Terminal box endpanel N.D.E (plain)	1
	230–10571	Terminal box endpanel N.D.E. (plain) low/profile	1
19	230–10565	Terminal box endpanel D.E. (plain)	1
	230–10599	Terminal box endpanel D.E. (access))	1
	A041H349	Terminal box endpanel D.E. (plain) low/profile	1
20a	230–10567	Terminal box side panel (left hand)	1
	230–10573	Terminal box side panel (access)	1
	230–10574	Terminal box side panel lh (plain) low profile	1
20b	230–10575	Terminal box side panel (right hand)	2
	230–10568	Terminal box side panel (access)	1
	230–10583	Terminal box side panel rh (plain) low profile	1
	230–10580	Terminal box side panel (rh series 5 trans)	1
	230–10627	Terminal box side panel (access no pfc)	1
21	230–10069	Terminal box lid	1
22	450–14310	A.V.R Cover plate to (28/11/04)	1
	410–10536	A.V.R Cover plate from (28/11/04)	1

Copyright © 2016 Cummins Generator Technologies. All Rights Reserved.

UCI224C to G – 2 Bearing (4 Pole) (Continued)

Item	Part No.	Description	Qty
23	45–0742	A.V.R Mounting bracket	1
24	E000–23412/1P	A.V.R. MX341 (Standard Series 3)	1
	E000–23408	A.V.R. MX341 UL	1
	E000–23212/1P	A.V.R. MX321 (Series 3)	1
	E000–23215	A.V.R. MX321 UL	1
	E000–24403/1P	A.V.R. AS440 (Standard Series 4)	1
	E000–24408/1P	A.V.R. AS440 UL Approved	1
	E000–24602/1P	A.V.R. SX460 (Standard Series 6)	1
	E000–24608/1P	A.V.R. SX460 UL Approved	1
	E000–24210/1P	A.V.R. SX421	1
25	450–15489	6 Way Terminal block	2
26	45–0118	Heater 110–125 volt	1
	A040G630	Heater Kit 110–125 v to include term box for retrofit	1
	45–0117	Heater 220–260 volt	1
	A040G622	Heater Kit 220–260 v to include term box for retrofit	1
27	45–0024	Terminal box for heaters	1
28	230–10001	D.E. Adaptor ring	1
40	230–10073	D.E. Bracket	1
41	210–10121	D.E. Screen	1
42	45–0632	Louvre	1
43	45–0365	D.E. Bearing Kit	1
46	45–0529	Adaptor Kit SAE 1	2
	45–0530	Adaptor Kit SAE 2	1
	45–0604	Adaptor Kit SAE 2 (DIN)	1
	45–0531	Adaptor Kit SAE 3	1
	45–0532	Adaptor Kit SAE 4	1
	45–0533	Adaptor Kit SAE 5	1
47	See No.46	Adaptor cover (included in Adaptor kits)	1

Copyright © 2016 Cummins Generator Technologies. All Rights Reserved.

This page is Intentionally blank.

Copyright © 2016 Cummins Generator Technologies. All Rights Reserved.

UCI274C to H 1 Bearing

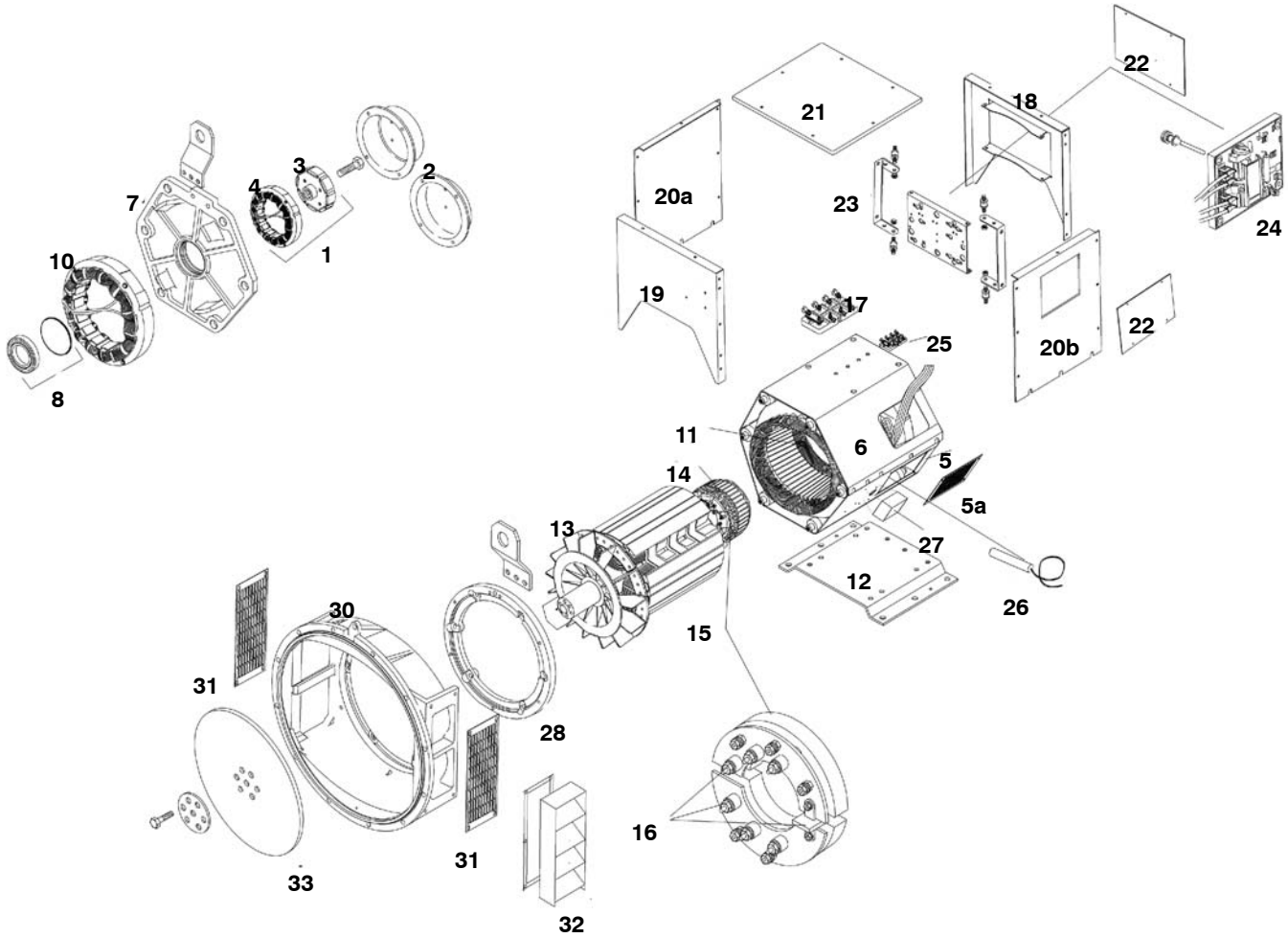

Copyright © 2016 Cummins Generator Technologies. All Rights Reserved.

UCI274C to H 1 Bearing

Item	Part No.	Description	Qty
1	45–0075A	Complete P.M.G. upfit kit	1
2	450–14360	P.M.G. cover (cover included in above kit)	1
	450–14450	NON P.M.G cover	1
3	45–1080	Current P.M.G. rotor/stator repair kit	1
4	45–1080	Current P.M.G. rotor/stator repair kit	1
5	330–10386	Main stator bottom cover C–D	1
	330–10387	Main stator bottom cover E–F	1
	330–10388	Main stator bottom cover G	1
	330–10389	Main stator bottom cover H	1
5a	330–10020	Air inlet cover	2
	330–10099	Air inlet cover (Airfilter)	2
6	330–10381	Main stator top cover C–D	1
	330–10382	Main stator top cover E–F	1
	330–10383	Main stator top cover G	1
6	330–10384	Main stator bottom cover H	1
7	330–10002	N.D.E. Bracket	1
	330–10258	N.D.E.Bracket (for use with Brg RTD's)	
8	45–0868	N.D.E. Bearing kit	1
10	230–1497	Exciter stator C – D (40mm)	1
	330–1280	Exciter stator E – H (60mm)	1
11	QMSN	Main stator bar assy	1
12	330–10137	Foot	1
13	QMSN	Main rotor assy	2
14	210–1037	Exciter rotor C – D 40mm	1
	310–1028	Exciter rotor E – G 60mm	1
15	45–0428	Rotating rectifier assy	1
16	RSK–2001	Diode fwd/rev & varistor kit	1
17	450–15617	Main Terminal board	1
18	330–10622	Terminal box endpanel N.D.E. (Plain) & ENC500	1
	330–10602	Terminal box endpanel N.D.E. (Access) & ENC500	1
	330–10634	Terminal box endpanel N.D.E. (Plain) (Low Profile)	1
19	330–10601	Terminal box endpanel D.E. (Plain) & ENC500	1
	330–10630	Terminal box endpanel D.E. (Access)	1
	330–10634	Terminal box endpanel D.E.(Plain) (Low Profile)	1
20a	330–10603	Terminal box side panel (Left hand) (Plain) & ENC500	1
	330–10617	Terminal box side panel (Left hand) (Access) & ENC500	1
	330–10605	Terminal box side panel (Left hand) (Airfilter) & ENC500	1
	330–10600	Terminal box side panel (Left hand) (Low Profile)	1
	330–10613	Terminal box side panel (Vent) (Plain) (Left hand) & ENC500 J–K Core only	1
	330–10620	Terminal box side panel (Vent) (Aperture) (Left hand) & ENC500 J–K Core only	1
	330–10611	Terminal box side panel (Vent) (Glandplate (Left hand) & ENC500 J–K Core only	1

Copyright © 2016 Cummins Generator Technologies. All Rights Reserved.

Item	Part No.	Description	Qty
	330–10615	Terminal box side panel (Right Hand) (Airfilter) & ENC500	1
	330–10606	Terminal box side panel (Right Hand) (Airfilter) (Aperture) & ENC500	1
	330–10636	Terminal box side panel (Right Hand) ((Aperture)) (Low Profile)	1
	330–10614	Terminal box side panel (Vent) (Plain) (Right Hand) & ENC500 J–K Core only	1
	330–10612	Terminal box side panel (Vent) (Aperture) (Right Hand) & ENC500 J– K Core only	1
21	330–10069	Terminal box lid	1
22	450–14310	A.V.R Cover plate to (28/11/04)	1
	410–10536	A.V.R Cover plate from (28/11/04)	1
23	45–0742	A.V.R. Mounting bracket	1
24	E000–23412/1P	A.V.R. MX341 (Standard Series 3)	1
	E000–23408	A.V.R. MX341 UL	1
	E000–23212/1P	A.V.R. MX321 (Series 3)	1
	E000–23215	A.V.R. MX321 UL	1
	E000–24403/1P	A.V.R. AS440 (Standard Series 4)	1
	E000–24408/1P	A.V.R. AS440 UL Approved	1
	E000–24602/1P	A.V.R. SX460 (Standard Series 6)	1
	E000–24608/1P	A.V.R. SX460 UL Approved	1
	E000–24210/1P	A.V.R. SX421	1
25	450–15489	6 way Terminal block	2
26	45–0118	Heater 110–125 VOLT	1
	A040G630	Heater Kit 110–125 v to include term box for retrofit	1
	45–0117	Heater 220–260 VOLT	1
	A040G622	Heater kit 220–260 v to include term box for retrofit	1
27	45–0024	Terminal box for heaters	1
28	230–10001	D.E Adaptor ring	1
30	45–0690	D.E. Adaptor Kit SAE 1	1
	45–0520	D.E. Adaptor Kit SAE 2	1
	45–0521	D.E. Adaptor Kit SAE 3	1
31	310–10400	D.E. Screen (Included in Adaptor Kits)	1
32	45–0633	D.E. Louvre	1
33	45–0764	Coupling Kit SAE 10	1
	45–0765	Coupling Kit SAE 11.5	1
	45–0766	Coupling Kit SAE 14	1
	45–0767	Coupling Kit DELCO 17.75	1
	45–0768	Coupling Kit SAE 11.5 (For SAE 1 New)	1

Copyright © 2016 Cummins Generator Technologies. All Rights Reserved.

This page is Intentionally blank.

Copyright © 2016 Cummins Generator Technologies. All Rights Reserved.

UCI274C to H 2 Bearing (4 Pole)

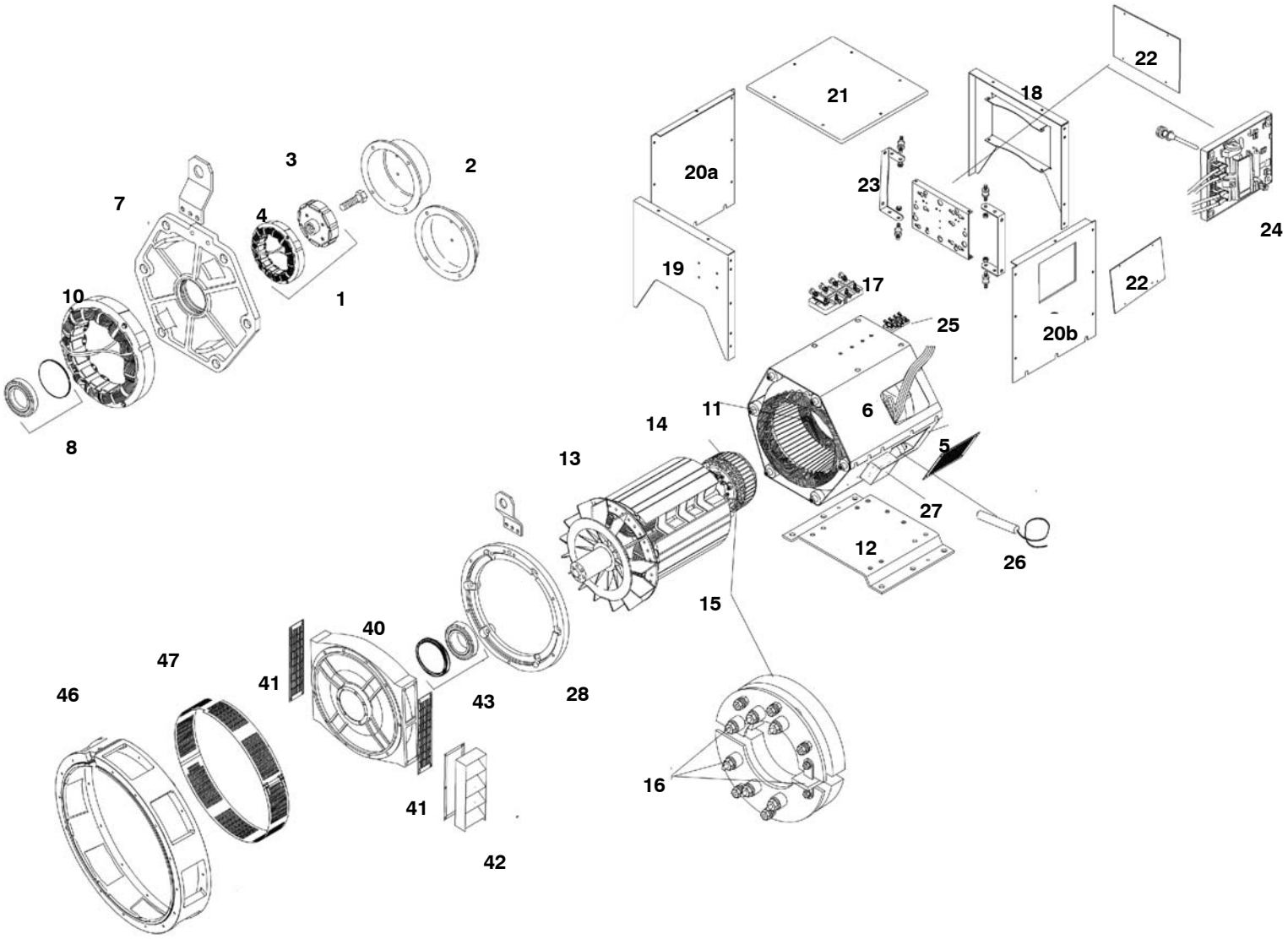

Copyright © 2016 Cummins Generator Technologies. All Rights Reserved.

UCI274C to H 2 Bearing (4 Pole)

Item	Part No.	Description	Qty
1	45–0075A	Complete P.M.G. upfit kit	1
2	450–14360	P.M.G. cover (cover included in above kit)	1
	450–14450	NON PMG Cover	1
3	45–1080	Current P.M.G. rotor/stator repair kit	1
4	45–1080	Current P.M.G. rotor/stator repair kit	1
5	330–10386	Main stator bottom cover C–D	1
	330–10387	Main stator bottom cover E–F	1
	330–10388	Main stator bottom cover G	1
	330–10389	Main stator bottom cover H	1
5a	330–10020	Air inlet cover	2
	330–10099	Air inlet cover (Airfilter)	2
6	330–10381	Main stator top cover C–D	1
	330–10382	Main stator top cover E–F	1
	330–10383	Main stator top cover G	1
	330–10384	Main stator top cover H	1
7	330–10002	N.D.E. Bracket	1
	330–10258	N.D.E. Bracket (For use with Brg RTD's)	
8	45–0868	N.D.E. Bearing kit	1
10	230–1497	Exciter stator C – D (40mm)	1
	330–1280	Exciter stator E – H (60mm)	1
11	QMSN	Main stator bar assy	1
12	330–10137	Foot	1
13	QMSN	Main rotor assy	2
14	210–1037	Exciter rotor C – D 40mm	1
	310–1028	Coupling Kit E – G 60mm	1
15	45–0428	Rotating rectifier assy	1
16	RSK–2001	Diode fwd/rev & varistor kit	1
17	450–15617	Main Terminal board	1
18	330–10622	Terminal box endpanel N.D.E. (Plain) & ENC500	1
	330–10602	Terminal box endpanel N.D.E. (Access) & ENC500	1
	330–10634	Terminal box endpanel N.D.E. (Plain) (Low Profile)	1
19	330–10601	Terminal box endpanel D.E. (Plain) & ENC500	1
	330–10630	Terminal box endpanel D.E. (Access)	1
	330–10634	Terminal box endpanel D.E. (Plain) (Low Profile)	1

Copyright © 2016 Cummins Generator Technologies. All Rights Reserved.

UCI274C to H 2 Bearing (4 Pole) (Continued)

Item	Part No.	Description	Qty
20a	330–10603	Terminal box endpanel (Left hand) (Plain) & ENC500	1
	330–10617	Terminal box endpanel (Left hand) (Access) & ENC500	1
	330–10605	Terminal box side panel (Left hand) (Airfilter) & ENC500	1
	330–10600	Terminal box side panel (Left hand) (Low Profile)	1
	330–10613	Terminal box side panel (Vent) (Plain) (Left hand) & ENC500 J–K Core Only	1
	330–10620	Terminal box side panel (Vent) (Aperture) (Left hand) & ENC500 J–KCore Only	1
	330–10611	Terminal box side panel (Vent) (Glandplate) (Left hand) & ENC500 J–K Core Only	1
20b	330–10609	Terminal box side panel (Right Hand) (Plain) & ENC500	
	330–10615	Terminal box side panel (Right Hand) (Airfilter) & ENC500	1
	330–10606	Terminal box side panel (Right Hand) (Airfilter)(Aperture) & ENC500	1
	330–10636	Terminal box side panel (Right Hand)(Airfilter) (Low Profile)	1
	330–10614	Terminal box side panel (Vent) (Plain) ((Right Hand)) & ENC500 J–K Core Only	1
	330–10612	Terminal box side panel (Vent) (Aperture) ((Right Hand)) & ENC500 J– K Core Only	1
21	330–10069	Terminal box lid	1
22	450–14310	A.V.R.Cover plate to (28/11/04)	1
	410–10536	A.V.R. Cover plate from (28/11/04)	1
23	45–0742	A.V.R. Mounting bracket	1
24	E000–23412/1P	A.V.R. MX341 (Standard Series 3)	1
	E000–23408	A.V.R. MX341 UL	1
	E000–23212/1P	A.V.R. MX321 (Series 3)	1
	E000–23215	A.V.R. MX321 UL	1
	E000–24403/1P	A.V.R. AS440 (Standard Series 4)	1
	E000–24408/1P	A.V.R. AS440 UL Approved	1
	E000–24602/1P	A.V.R. SX460 (Standard Series 6)	1
	E000–24608/1P	A.V.R. SX460 UL Approved	1
	E000–24210/1P	A.V.R. SX421	1
25	450–15489	6 Way Terminal block	2
26	45–0118	Heater 110–125 VOLT	1
	A040G630	Heater Kit 110–125 v to include term box for retrofit	1
	45–0117	Heater 220–260 volt	1
	A040G622	Heater Kit 220–260 v to include term box for retrofit	1
27	45–0024	Terminal box for heaters	1
28	230–10001	D.E Adaptor ring	1
40	330–10076	D.E.Bracket	1

Copyright © 2016 Cummins Generator Technologies. All Rights Reserved.

UCI274C to H 2 Bearing (4 Pole) (Continued)

Item	Part No.	Description	Qty
41	310–10049	D.E. Screen	2
42	45–0634	Louvre	1
43	45–0367	D.E.Bearing kit	1
46	45–0522	Adaptor Kit SAE 1	1
	45–0523	Adaptor Kit SAE 2	1
	45–0524	Adaptor Kit SAE 3	1
	45–0863	Adaptor Kit DIN 1	1
	45–0912	Adaptor Kit DIN 2	1
47	See No.46	Adaptor cover (Included in Adaptor Kits)	1

Copyright © 2016 Cummins Generator Technologies. All Rights Reserved.

HC434C to F – 1 Bearing

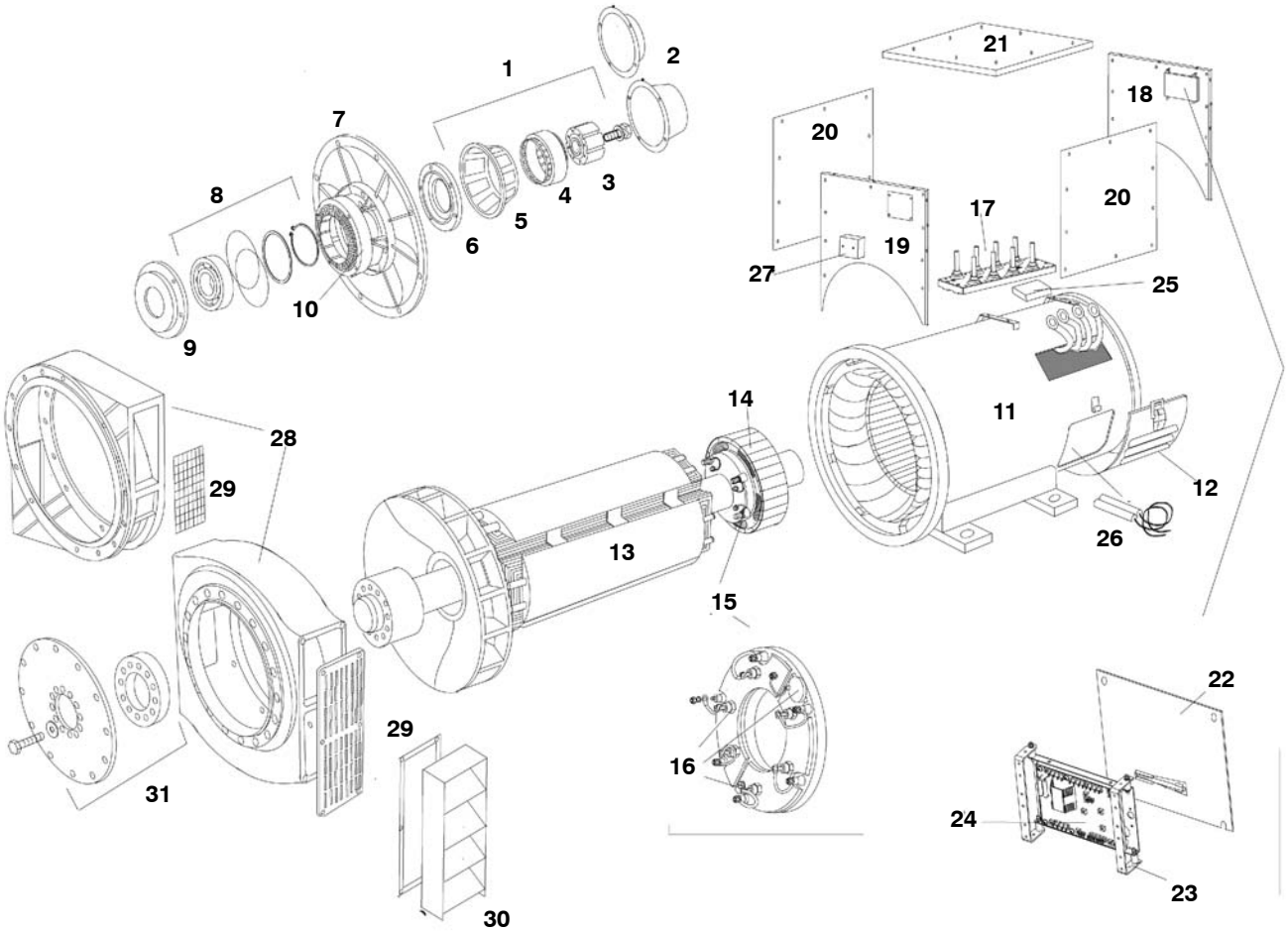

Copyright © 2016 Cummins Generator Technologies. All Rights Reserved.

HC434C to F – 1 Bearing

Item	Part No.	Description	Qty
1	45–0059A	Complete P.M.G. upfit kit (to 18/08/00) (Obsolete)	1
	45–0318A	Complete P.M.G. upfit kit	1
2	450–13350	P.M.G. Cover only included in Kit 45–0059A	1
	410–10704	P.M.G. Cover only included in Kit 45–0318A	1
	450–12590	NON PMG Cover (to 18/08/00)	1
	410–10705	NON PMG Cover(from 18/08/00)	1
3	45–1082	Current P.M.G. rotor/stator repair kit	1
4	45–1082	Current P.M.G. rotor/stator repair kit	1
5	See No. 1	P.M.G. Crown (if fitted)	1
6	410–10268	N.D.E. Bearing cap to (18/08/2000)	1
7	410–10256	N.D.E. Bracket to (02/2000)	1
	410–10703	N.D.E. Bracket from (02/2000)	1
8	45–0291	N.D.E. Bearing Kit to (18/08/00)	1
	45–0320	N.D.E. Bearing Kit from (18/08/00)	1
9	458–12960	N.D.E. Bearing cartridge to (18/08/2000)	1
10	410–1052	Exciter stator 50mm	1
11	Q.M.S.N.	Main stator frame assy	1
12	458–20200	N.D.E. Air inlet cover (louvred)	1
	410–10799	N.D.E. Air inlet cover (industrial)	1
	458–20400	N.D.E. Air inlet cover (airfilter)	1
13	Q.M.S.N.	Main rotor assy	1
14	458–22800	Exciter rotor 50mm to (22/11/99)	1
	410–1194	Exciter rotor 50mm from (22/11/99)	1
15	450–16016	Rotating rectifier assy	1
16	RSK–5001	Diode fwd/rev & varistor kit	1
17	410–10720	Main terminal board	1
18	410–10494	Terminal box endpanel N.D.E. to (21/07/02)	1
	410–10785	Terminal box endpanel N.D.E. from (21/07/02)	1
	410–10790	Terminal box endpanel n d.e. reconnectable 410–10790	1
19	410–10495	Terminal box endpanel D.E.to (21/07/02)	1
	410–10784	Terminal box endpanel D.E. from (21/07/02)	1
	410–10789	Terminal box endpanel D.E. reconnectable	1
20	410–10496	Terminal box side panel to (21/07/98)	2
	410–10786	TermInal box side panel from (21/07/98)	2
	410–10803	Terminal box side panel (airfilter)	2
	410–10819	Terminal box side panel (avr/pfc rhs)	1
	410–10788	Terminal box side panel (glandplate)	2
21	410–10173	Terminal box lid to (21/07/98)	1
	410–10497	Terminal box lid from (21/07/98)	1
22	410–10536	A.V.R. Cover plate to (21/07/02)	1
	450–15254	A.V.R. Cover plate from (21/07/02)	1

Copyright © 2016 Cummins Generator Technologies. All Rights Reserved.

HC434C to F – 1 Bearing (Continued)

Item	Part No.	Description	Qty
23	45–0742	A.V.R. Mounting bracket	1
24	E000–23412/1P	A.V.R. MX341 (standard series 3)	1
	E000–23408	A.V.R. MX341 UL	1
	E000–24403/1P	A.V.R. AS440 (standard series 4)	1
	E000–24408/1P	A.V.R. AS440 UL approved	2
	E000–23212/1P	A.V.R. MX321	1
	E000–23215	A.V.R MX321 UL	1
	E000–24210/1P	A.V.R SX421	1
25	450–15489	Auxiliary terminal board	2
26	45–0373	Heater 110–125 volt	1
	A051Y935	Heater Kit 110–125v to include term box for retrofit	1
	45–0374	Heater 220–260 volt	1
	A040G610	Heater Kit 220–260v to include term box for retrofit	1
27	45–0024	Terminal box for heaters	1
28	45–0663	D.E. adaptor Kit SAE 0	1
	45–0664	D.E. adaptor Kit SAE 0.5	1
	45–0665	D.E. adaptor Kit SAE 1	1
	45–0721	D.E. adaptor Kit SAE 2	1
	45–0753	D.E. adaptor Kit SAE 3	1
	45–0916	D.E. adaptor Kit SAE1 round	1
29	410–10762	D.E. Screen Included in Adaptor Kits	1
30	45–0651	D.E. Louvre SAE 0.5 & 1	1
	45–0652	D.E. Louvre SAE–0	1
31	45–0776	Coupling Kit SAE 11.5	2
	45–0777	Coupling Kit SAE 14	1
	45–0778	Coupling Kit SAE 18	1
	45–0779	Coupling Kit SAE 17.75	1

Copyright © 2016 Cummins Generator Technologies. All Rights Reserved.

This page is Intentionally blank.

Copyright © 2016 Cummins Generator Technologies. All Rights Reserved.

HC434C to F – 2 Bearing

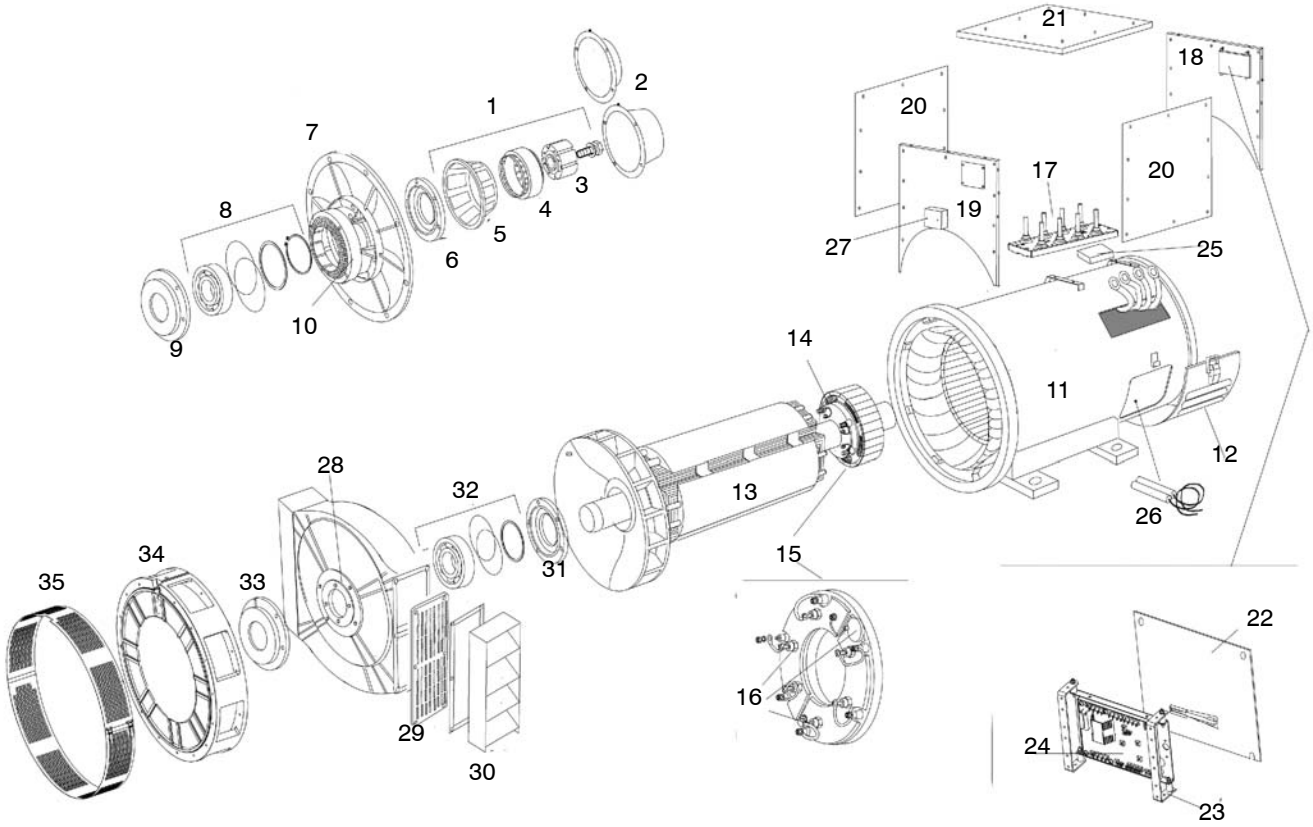

Copyright © 2016 Cummins Generator Technologies. All Rights Reserved.

HC434C to F – 2 Bearing

Item	Part No.	Description	Qty
1	45–0059A	Complete P.M.G. upfit kit (to 18/08/00) (Obsolete)	1
	45–0318A	Complete P.M.G. upfit kit	1
2	450–13350	P.M.G. Cover only included in Kit 45–0059A	1
	410–10704	P.M.G. Cover only included in Kit 45–0318A	1
	450–12590	NON PMG Cover (to 18/08/00)	1
	410–10705	NON PMG Cover(from 18/08/00)	1
3	45–1082	Current P.M.G. rotor/stator repair kit	1
4	45–1082	Current P.M.G. rotor/stator repair kit	1
5	See No. 1	P.M.G. Crown (if fitted)	1
6	410–10268	N.D.E. Bearing cap to (18/08/2000)	1
7	410–10256	N.D.E. Bracket to (02/2000)	1
	410–10703	N.D.E. Bracket from (02/2000)	1
8	45–0291	N.D.E. Bearing Kit to (18/08/00)	1
	45–0320	N.D.E. Bearing Kit from (18/08/00)	1
9	458–12960	N.D.E. Bearing cartridge to (18/08/2000)	1
10	410–1052	Exciter stator 50mm	1
11	Q.M.S.N.	Main stator frame assy	1
12	458–20200	N.D.E. Air inlet cover (louvred)	1
	410–10799	N.D.E. Air inlet cover (industrial)	1
	458–20400	N.D.E. Air inlet cover (airfilter)	1
13	Q.M.S.N.	Main rotor assy	1
14	458–22800	Exciter rotor 50mm to (22/11/99)	1
	410–1194	Exciter rotor 50mm from (22/11/99)	1
15	450–16016	Rotating rectifier assy	1
16	RSK–5001	Diode fwd/rev & varistor kit	1
17	410–10720	Main terminal board	1
18	410–10494	Terminal box endpanel N.D.E. to (21/07/02)	1
	410–10785	Terminal box endpanel N.D.E. from (21/07/02)	1
	410–10790	Terminal box endpanel N.D.E. reconnectable 410–10790	1
19	410–10495	Terminal box endpanel D.E. to (21/07/02)	1
	410–10784	Terminal box endpanel D.E. from (21/07/02)	1
	410–10789	Terminal box endpanel D.E. reconnectable	1
20	410–10496	Terminal box side panel to (21/07/98)	2
	410–10786	TermInal box side panel from (21/07/98)	2
	410–10803	Terminal box side panel (airfilter)	2
	410–10819	Terminal box side panel (avr/pfc rhs)	1
	410–10788	Terminal box side panel (glandplate)	2
21	410–10173	Terminal box lid to (21/07/98)	1
	410–10497	Terminal box lid from (21/07/98)	1
22	410–10536	A.V.R. Cover plate to (21/07/02)	1
	450–15254	A.V.R. Cover plate from (21/07/02)	1

Copyright © 2016 Cummins Generator Technologies. All Rights Reserved.

HC434C to F – 2 Bearing (Continued)

Item	Part No.	Description	Qty
23	45–0742	A.V.R. Mounting bracket	1
24	E000–23412/1P	A.V.R. MX341 (standard series 3)	1
	E000–23408	A.V.R. MX341 UL	1
	E000–24403/1P	A.V.R. AS440 (standard series 4)	1
	E000–24408/1P	A.V.R. AS440 UL approved	2
	E000–23212/1P	A.V.R. MX321	1
	E000–23215	A.V.R MX321 UL	1
	E000–24210/1P	A.V.R SX421	1
25	450–15489	Auxiliary terminal board	2
26	45–0373	Heater 110–125 volt	1
	A051Y935	Heater Kit 110–125v to include term box for retrofit	1
	45–0374	Heater 220–260 volt	1
	A040G610	Heater Kit 220–260v to include term box for retrofit	1
27	45–0024	Terminal box for heaters	1
28	458–11170	D.E. Bracket to (12/09/04)	1
	410–10781	D.E. Bracket from (12/09/04)	1
29	458–10260	D.E. Bracket screen	1
30	45–0653	D.E. Louvre	1
31	458–10130	D.E. Bearing cartridge to (18/08/00)	1
	410–10708	D.E. Bearing cartridge from (18/08/00)	1
32	45–0290	D.E. Bearing Kit to (18/08/00)	1
	45–0319	D.E. Bearing kit from (18/08/00)	1
33	410–10269	D.E. Bearing cap outer to (18/08/00)	1
	458–10706	D.E. Bearing cap outer from (18/08/00)	2
34	45–0675	2 Brg Adaptor Kit (SAE 0)	1
	45–0677	2 Brg Adaptor Kit (SAE 0.5)	1
	45–0676	2 Brg Adaptor Kit (SAE 1)	1
	45–0910	2 Brg Adaptor Kit (DIN 1)	1
35	Included in 34	D.E. Cover Screen (Included in Kits)	

Copyright © 2016 Cummins Generator Technologies. All Rights Reserved.

This page is Intentionally blank.

Copyright © 2016 Cummins Generator Technologies. All Rights Reserved.

HC534C to F – 1 Bearing Ser 3 & 4

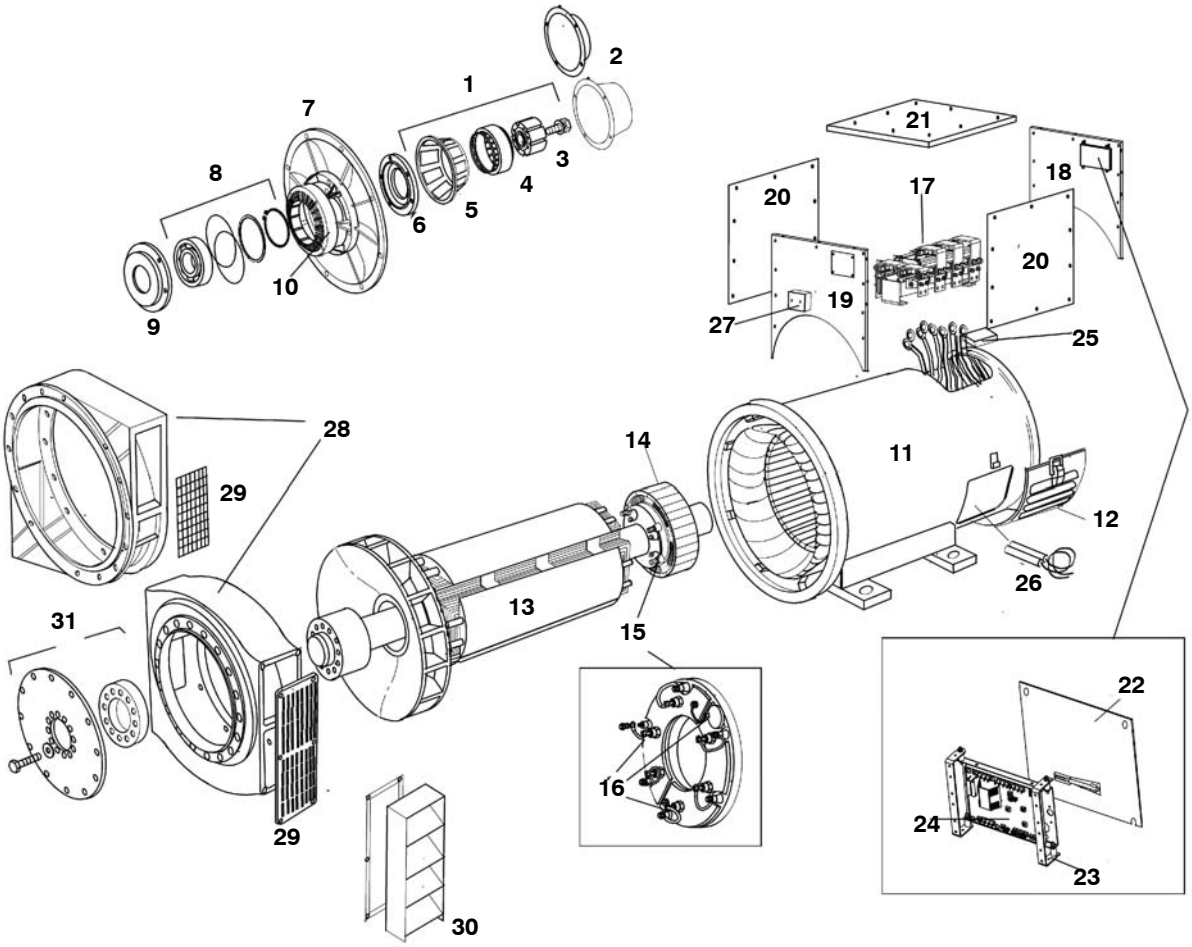

Copyright © 2016 Cummins Generator Technologies. All Rights Reserved.

HC534C to F – 1 Bearing Ser 3 & 4

Item	Part No.	Description	Qty
1	45–0059A	Complete P.M.G. upfit kit (to 18/08/00) (Obsolete)	1
	45–0328A	Complete P.M.G. upfit kit	1
2	450–13350	P.M.G. Cover only included in Kit 45–0059A	1
	410–10704	P.M.G. Cover only included in Kit 45–0328A	1
	450–12590	NON PMG Cover (to 18/08/00)	1
	410–10705	NON PMG Cover(from 18/08/00)	1
3	45–1082	Current P.M.G. rotor/stator repair kit	1
4	45–1082	Current P.M.G. rotor/stator repair kit	1
5	See No. 1	P.M.G. Crown (if fitted)	1
6	410–10268	N.D.E. Bearing cap to (30/09/00)	1
	520–10812	N.D.E. Bearing cap (regreaseable brg)	1
7	520–10306	N.D.E. Bracket to (30/09/00)	1
	520–10810	N.D.E. Bracket (regreaseable brg)	1
	520–10780	N.D.E. Bracket from (30/09/00)	1
8	45–0291	N.D.E. Bearing Kit to (30/09/00)	1
	45–0320	N.D.E. Bearing Kit from (30/09/00)	1
	45–1099	N.D.E Regrease bearing kit	1
9	458–12960	N.D.E. Bearing cartridge to (20/09/2000)	1
	520–10811	N.D.E. Bearing cartridge from (20/09/2000)	1
10	410–1052	Exciter stator 50mm	1
	520–10286	Exciter stator 65mm	1
11	Q.M.S.N.	Main stator frame assy	1
12	462–20100	N.D.E. Air inlet cover (louvred)	1
	520–10933	N.D.E. air inlet cover (industrial)	1
13	Q.M.S.N.	Main rotor assy	1
14	462–23400	Exciter rotor 50mm (No longer available)	1
	520–10305	Exciter rotor 65mm to fit internal bore diameter 98mm (no longer available)	1
	520–1142	Exciter rotor 65mm to fit internal bore diameter 110mm	1
15	450–16016	Rotating rectifier assy	1
16	RSK–5001	Diode fwd/rev & varistor kit	1
17	462–1020	Main terminal board	1
18	520–10153	Terminal box endpanel N.D.E. to (08/1998)	1
	520–10534	Terminal box endpanel N.D.E. to (19//09/1998)	1
	520–10907	Terminal box endpanel N.D.E. from (20/09/1998)	1
	520–10911	Terminal box endpanel N.D.E. (reverse entry)	1
	520–10918	Terminal box endpanel N.D.E. (pg gland)	1
	520–10982	Terminal box endpanel N.D.E. (To fit DM110 AVR)	1
	520–10914	Terminal box endpanel N.D.E. (reconnectable)	1
19	520–10181	Terminal box endpanel D.E.to (08/1998)	1
	520–10906	Terminal box endpanel D.E. from (08/1998)	1
	520–10910	Terminal box endpanel D.E. (reverse entry)	1

Copyright © 2016 Cummins Generator Technologies. All Rights Reserved.

HC534C to F – 1 Bearing Ser 3 &4 (Continued)

Item	Part No.	Description	Qty
	520–10913	Terminal box endpanel D.E. (reconnectable)	1
20	462–11880	Terminal box side panel to (08/1998)	2
	520–10908	Terminal box side panel from (08/1998)	2
	520–10909	Terminal box side panel (Airfilters) from (08/1998)	2
	520–10912	Terminal box side panel (pf control diff)	1
	520–11015	Terminal box side panel (reconnectable/airfilters)	2
21	462–11840	Terminal box lid to (08/1998)	1
	520–10536	Terminal box lid from (08/1998)	1
22	450–14310	A.V.R. Cover plate	1
23	45–0742	A.V.R. Mounting bracket	1
24	E000–23412/1P	A.V.R. MX341 (standard series 3)	1
	E000–23408	A.V.R. MX341 UL	1
	E000–24403/1P	A.V.R. AS440 (standard series 4)	1
	E000–24408/1P	A.V.R. AS440 UL approved	1
	E000–23212/1P	A.V.R. MX321	1
	E000–23215	A.V.R. MX321 UL	1
	E000–24210/1P	A.V.R. SX421	1
25	450–15489	Auxiliary terminal board	2
26	45–0073	Heater 110–125 volt	1
	A040G624	Heater Kit 110–125v to include term box for retrofit	1
	45–0074	Heater 220–260 volt	1
	A040G620	Heater Kit 220–260v to include term box for retrofit	1
27	45–0024	Terminal box for heaters	1
28	45–0667	D.E. Adaptor Kit SAE 0	1
	A051Y674	D.E. Adaptor Kit (SAE 0 round/heavy duty)	1
	45–0666	D.E. Adaptor Kit SAE 00	1
	45–0668	D.E. Adaptor Kit SAE 0.5	1
	45–0669	D.E. Adaptor Kit SAE 1	1
	45–0917	D.E. Adaptor Kit (SAE 1 round/heavy duty)	1
	45–0802	D.E. Adaptor Kit (SAE 1 round)	1
29	See No. 28	D.E. Screen (Included in Adaptor Kits)	2
30	45–0655	D.E. Louvre SAE 0 & 0.5 & 1	1
	45–0654	D.E. Louvre SAE –00	1
31	45–0780	Coupling Kit SAE 14	1
	45–0781	Coupling Kit SAE 18	1
	45–0783	Coupling Kit SAE 17.75	1
	45–0782	Coupling Kit SAE 21	1

Copyright © 2016 Cummins Generator Technologies. All Rights Reserved.

This page is Intentionally blank.

Copyright © 2016 Cummins Generator Technologies. All Rights Reserved.

HC534C to F – 2 Bearing

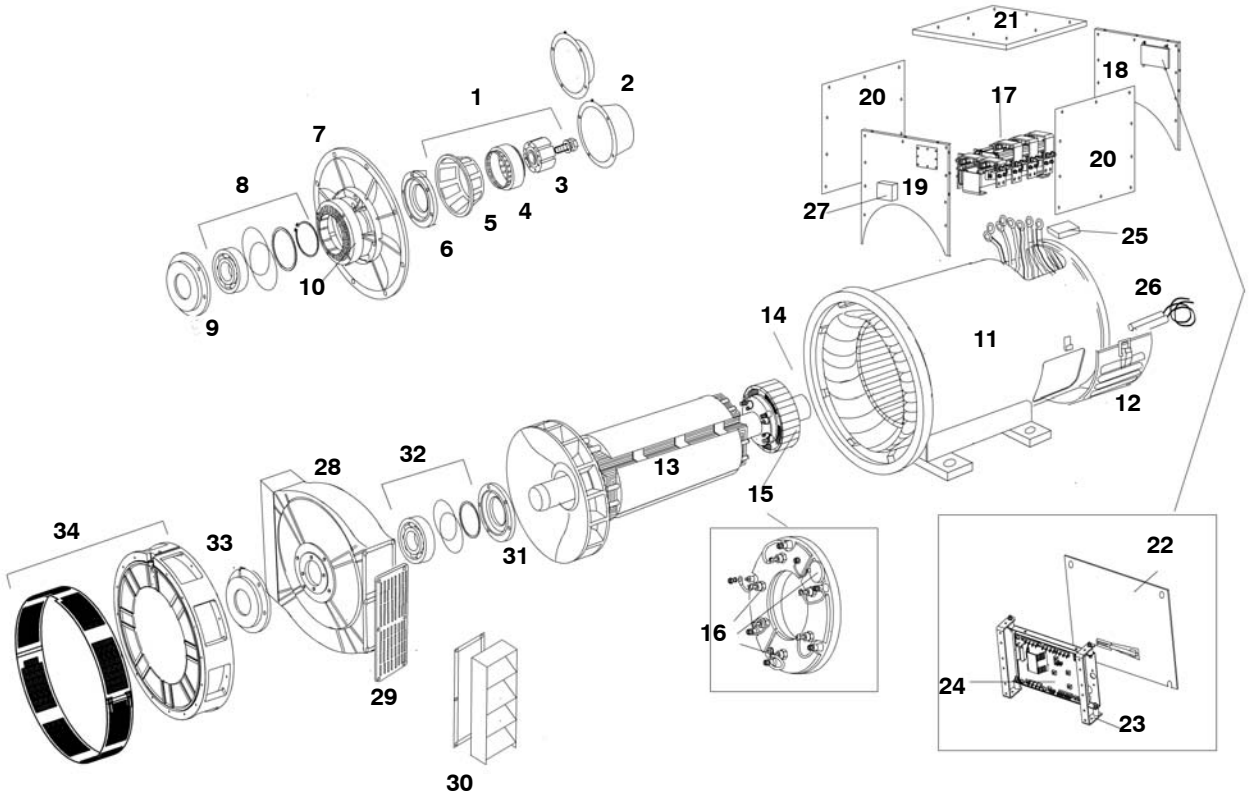

Copyright © 2016 Cummins Generator Technologies. All Rights Reserved.

HC534C to F – 2 Bearing Ser 3 & 4

Item	Part No.	Description	Qty
1	45–0060A	Complete P.M.G. upfit kit (to 18/08/00) obsolete	1
	45–0328A	Complete P.M.G .upfit kit	1
2	450–13350	P.M.G. Cover only included in Kit 45–0059A	1
	410–10704	P.M.G. Cover only included in Kit 45–0328A	1
	450–12590	NON PMG Cover (to 18/08/00)	1
	410–10705	NON PMG Cover (from 18/08/00)	1
3	45–1082	Current P.M.G. rotor/stator repair kit	1
4	45–1082	Current P.M.G rotor/stator repair kit	1
5	See No. 1	P.M.G. Crown (if fitted)	1
6	410–10268	N.D.E. Bearing cap to (30/09/00)	1
	520–10812	N.D.E. Bearing cap (regreaseable brg)	1
7	520–10306	N.D.E. Bracket to (30/09/00)	1
	520–10780	N.D.E. Bracket from (30/09/00)	1
	520–10810	N.D.E. bracket (regreaseable brg)	1
8	45–0291	N.D.E. Bearing kit to (30/09/00)	1
	45–0320	N.D.E. Bearing kit from (30/09/00)	1
	45–1099	N.D.E. Bearing kit (regrease)	1
9	458–12960	N.D.E. Bearing cartridge to (20/09/2000)	1
	520–10811	N.D.E. Bearing cartridge from (20/09/2000)	1
10	410–1052	Exciter stator 50mm	1
	520–10286	Exciter stator 65mm	1
11	Q.M.S.N.	Main stator frame assy	1
12	462–20100	N.D.E. air inlet cover (louvred)	1
	520–10933	N.D.E air inlet cover (industrial)	1
13	Q.M.S.N.	Main rotor assy	1
14	462–23400	Exciter rotor 50mm (No longer available)	1
	520–10305	Exciter rotor 65mm to fit internal bore diameter 98mm (no longer available)	1
	520–1142	Exciter rotor 65mm to fit internal bore diameter 110mm	1
15	450–16016	Rotating rectifier assy	1
16	RSK–5001	Diode fwd/rev & varistor kit	1
17	462–1020	Main terminal board	1
18	520–10153	Terminal box endpanel N.D.E. to (08/1998)	1
	520–10534	Terminal box endpanel N.D.E. to (19//09/1998)	1
	520–10907	Terminal box endpanel N.D.E. from (20/09/1998)	1
	520–10911	Terminal box endpanel N.D.E (reverse entry)	1
	520–10918	Terminal box endpanel N.D.E. (pg gland)	1
	520–10982	Terminal box endpanel N.D.E. (To fit DM110 AVR)	1
	520–10914	Terminal box endpanel N.D.E. (reconnectable)	1
19	520–10181	Terminal box endpanel D.E.to (08/1998)	1
	520–10906	Terminal box endpanel D.E. from (08/1998)	1
	520–10910	Terminal box endpanel D.E. (reverse entry)	1

Copyright © 2016 Cummins Generator Technologies. All Rights Reserved.

HC534C to F – 2 Bearing Ser 3 & 4 (Continued)

Item	Part No.	Description	Qty
	520–10913	Terminal box endpanel D.E. (reconnectable)	1
20	462–11880	Terminal box side panel to (08/1998)	2
	520–10908	Terminal box side panel from (08/1998)	2
	520–10909	Terminal box side panel (Airfilters) from (08/1998)	2
	520–10912	Terminal box side panel (pf control diff)	1
	520–11015	Terminal box side panel (reconnectable/airfilters)	2
21	462–11840	Terminal box lid to (08/1998)	1
	520–10536	Terminal box lid from (08/1998)	1
22	450–14310	A.V.R Cover plate	1
23	45–0742	A.V.R Mounting bracket	1
24	E000–23412/1P	A.V.R MX341 (standard series 3)	1
	E000–23408	A.V.R MX341 UL	1
	E000–24403/1P	A.V.R AS440 (standard series 4)	1
	E000–24408/1P	A.V.R. AS440 UL approved	1
	E000–23212/1P	A.V.R MX321	1
	E000–23215	A.V.R MX321 UL	1
	E000–24210/1P	A.V.R SX421	1
25	450–15489	Auxiliary terminal board	2
26	45–0073	Heater 110–125 volt	1
	A040G624	Heater kit 110–125v to include term box for retrofit	1
	45–0074	Heater 220–260 volt	1
	A040G620	Heater kit 220–260v to include term box for retrofit	1
27	45–0024	Terminal box for heaters	1
28	462–11170	D.E. Bracket to (29/09/2000)	1
	520–10557	D.E. Bracket from (29/09/2000)	1
29	462–10260	D.E. Bracket screen	2
30	520–10070	D.E. Louvre	2
31	462–10130	D.E. Bearing cartridge to (30/09/2000)	1
	520–10776	D.E. Bearing cartridge from (30/09/2000)	1
	520–10816	D.E. Bearing kit (regrease)	1
32	45–0292	D.E. Bearing cap outer to (30/09/2000)	1
	45–0321	D.E. Bearing cap outer from (30/09/2000)	1
	45–1100	D.E. Bearing cap (regrease)	1
33	520–10333	D.E. Bearing cap outer to (30/09/2000)	1
	520–10778	D.E. Bearing cap outer from (30/09/2000)	1
	520–10818	D.E. Bearing cap (regrease)	1
34	45–0679	2 Brg Adaptor kit SAE 0	1
	45–0932	2 Brg Adaptor kit SAE 0 DIN	1
	45–0680	2 Brg Adaptor kit SAE 0.5	1
	45–0681	2 Brg Adaptor kit SAE 1	1
	45–0808	2 Brg Adaptor kit SAE 1 DIN	1
	45–0678	2 Brg Adaptor kit SAE 00	1

Copyright © 2016 Cummins Generator Technologies. All Rights Reserved.

HC534C to F – 2 Bearing Ser 3 & 4 (Continued)

Item	Part No.	Description	Qty
35	Included in 34	D.E. Cover Screen (Included in Kits)	1
		NOTE:– Regrease option is not retrofittable	

Copyright © 2016 Cummins Generator Technologies. All Rights Reserved.

HC634G to K – 1 Bearing (Ser 3)

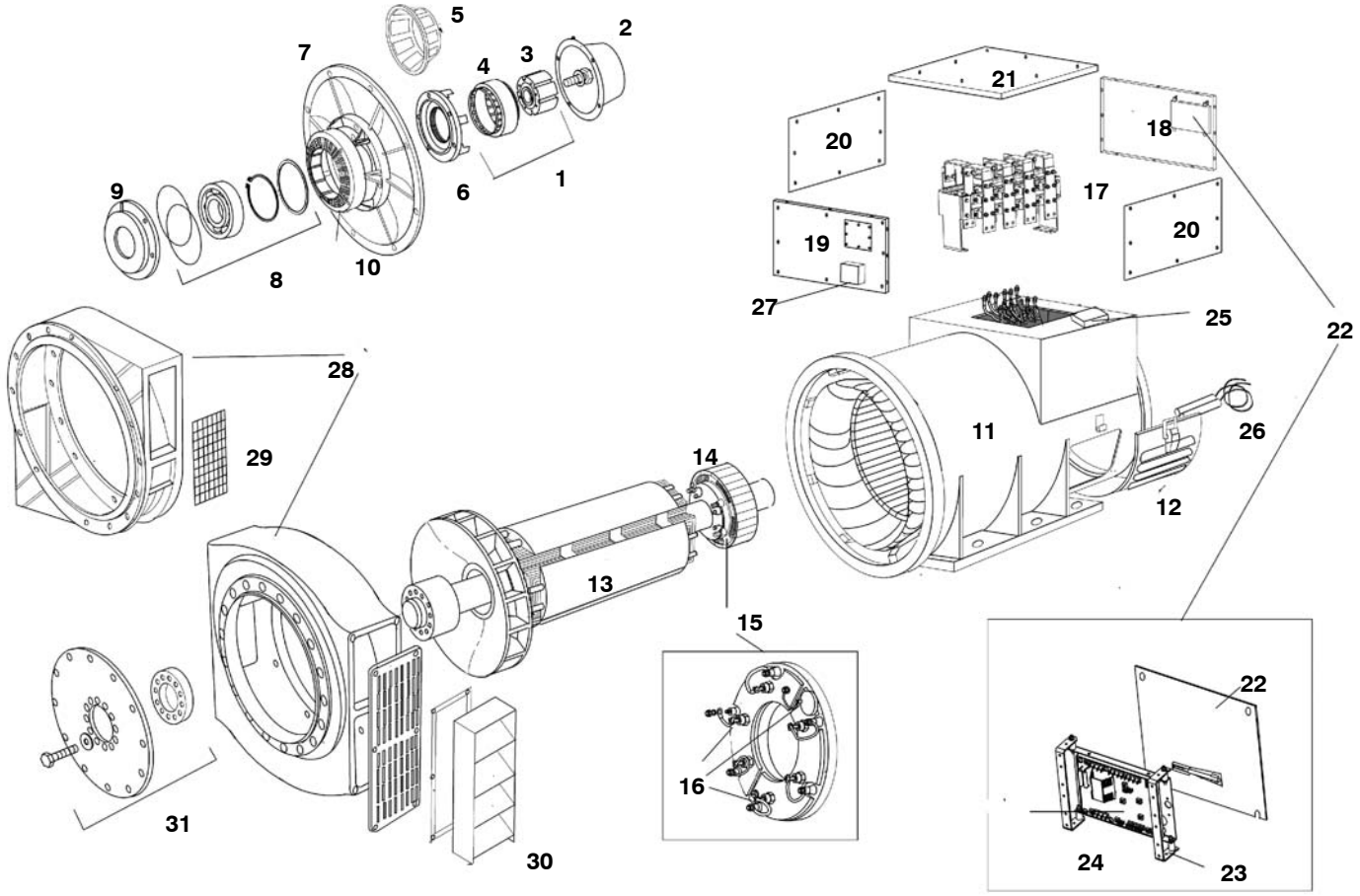

Copyright © 2016 Cummins Generator Technologies. All Rights Reserved.

HC634G to K – 1 Bearing (Ser 3)

Item	Part No.	Description	Qty
1	45–0060A	Complete P. M.G. upfit kit to (10/05/01) (Obsolete)	1
	45–0341A	Complete P .M.G upfit kit from (10/05/01)	1
2	760–10562	P. M.G. Cover (Cover included in above kit)	1
3	45–1082	Current P.M.G. Rotor/stator repair kit	1
4	45–1082	Current P.M.G. Rotor/stator repair kit	1
5	See No.1	P. M.G. Crown (if fitted)	1
6	660–10071	N.D.E. Bearing cap to (10/05/01)	1
	660–10864	N.D.E. Bearing cap from (10/05/01)	1
7	660–10064	N.D.E. Bracket to (10/05/01)	1
	660–10860	N.D.E. Bracket from (10/05/01)	1
8	45–0297	N.D.E. Bearing kit to (10/05/01)	1
	45–0340	N.D.E. Bearing kit from (10/05/01)	1
	45–0343	N.D.E. Bearing kit (Regrease)	1
9	462–12920	N.D.E. Bearing cartridge to (10/05/01)	1
	660–10862	N.D.E. Bearing cartridge from (10/05/01	1
10	366–40800	Exciter stator 75mm	1
11	QMSN	Main stator frame assy	1
12	660–11565	N.D.E. Air inlet cover (industrial)	1
	464–31600	N.D.E air inlet cover (marine)	1
13	QMSN	Main rotor assy	1
14	660–1010	Exciter rotor 75mm	1
15	450–16025	Rotating rectifier assy	1
16	RSK–6001	Diode fwd/rev & varistor kit	1
17	660–1005	Main terminal board	1
18	660–10653	Terminal box endpanel N.D.E	1
	660–10655	Terminal box endpanel N.D.E (PG Gland & diff protection)	1
	660–10925	Terminal box endpanel N.D.E (HI–reconnectable)	1
	660–11220	Terminal box endpanel N.D.E (HI–Airfilters)	1
	660–11604	Terminal box endpanel N.D.E (Standard digital A.V.R)	1
19	660–10652	Terminal box endpanel D.E	1
	660–10654	Terminal box endpanel D.E.(Diff/Protection)	1
	660–10784	Terminal box endpanel D.E. (PG Gland or standard digital A.V.R)	1
	660–10783	Terminal box endpanel D.E. (PG Gland diff protection)	1
	660–10924	Terminal box endpanel D.E. (HI–Reconnectable)	1
	660–11219	Terminal box endpanel D.E (HI–Airfilters)	1
20	660–10650	Terminal box side panel	2
21	660–10651	Terminal box lid	1
22	450–15254	A.V.R. Cover plate (access)	1
	450–14310	A.V.R cover plate (blanking)	1
23	45–0742	A.V.R. Mounting bracket	1
24	E000–23412/1P	A.V.R. MX341 (standard series 3)	1
	E000–23408	A.V.R. MX341 UL	1
	E000–23212/1P	A.V.R. MX321	1

Copyright © 2016 Cummins Generator Technologies. All Rights Reserved.

HC634G to K – 1 Bearing (Ser 3) (Continued)

Item	Part No.	Description	Qty
	E000–23215	A.V.R. MX321 UL	1
	E000–23800	A.V.R. DM110	1
25	003–14055	Auxiliary terminal board	2
26	45–0373	Heater 110–125 volt	1
	A040G624	Heater Kit 110–125v to include term box for retrofit	1
	45–0374	Heater 220–260 volt	1
	A040G610	Heater Kit 220–260v to include term box for retrofit	1
27	45–0024	Terminal box for heaters	1
28	45–0943	D.E. Adaptor Kit SAE 0	1
	45–0944	D.E. Adaptor Kit SAE 0.5	1
	45–0937	D.E. Adaptor Kit SAE 1	1
	45–0945	D.E. Adaptor Kt SAE 0 round	1
	45–0942	D.E. Adaptor Kit SAE 00	1
29	See No. 30	D.E. SCREEN (Included in Adaptor Kits)	2
30	45–0658	D.E. Louvre SAE 0 & 0.5 & 1	1
	45–0657	D.E. Louvre SAE–00	1
31	45–0788	Coupling Kit SAE 14	1
	45–0789	Coupling Kit SAE 18	1
	45–0791	Coupling Kit SAE 17.75	1
	45–0790	Coupling Kit SAE 21	1

Copyright © 2016 Cummins Generator Technologies. All Rights Reserved.

This page is Intentionally blank.

Copyright © 2016 Cummins Generator Technologies. All Rights Reserved.

HC634G to K – 2 Bearing

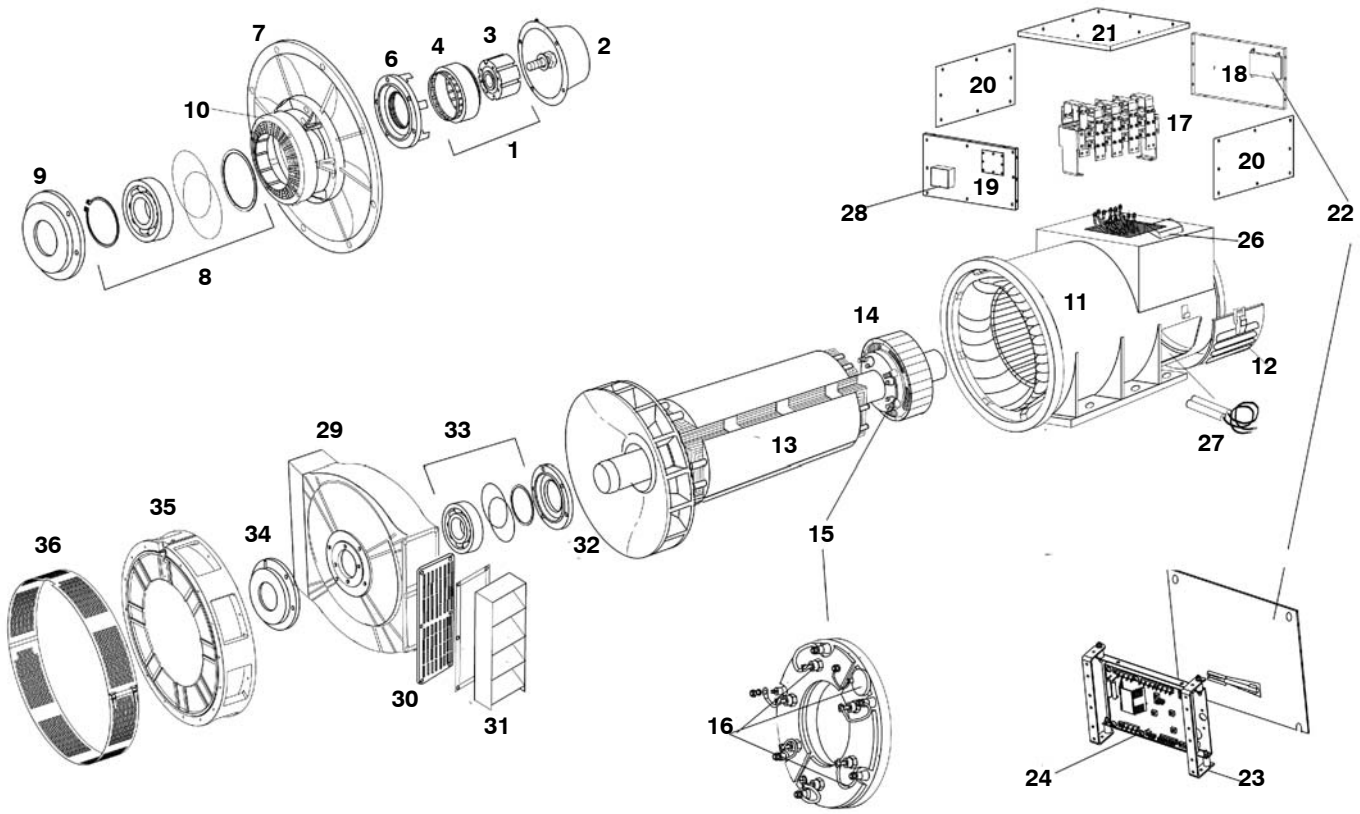

Copyright © 2016 Cummins Generator Technologies. All Rights Reserved.

HC634G to K – 2 Bearing

Item	Part No.	Description	Qty
1	45–0060A	Complete P.M.G. upfit kit to (10/05/01)	1
	45–0341A	Complete P.M.G upfit kit from (10/05/01)	1
2	760–10562	P.M.G. Cover (Cover included in above kit)	1
3	45–1082	Current P.M.G. Rotor/stator repair kit	1
4	45–1082	Current P.M.G. Rotor/stator repair kit	1
5	See No.1	P.M.G. Crown (if fitted)	1
6	660–10071	N.D.E. Bearing cap to (10/05/01)	1
	660–10864	N.D.E. Bearing cap from (10/05/01)	1
7	660–10064	N.D.E. Bracket to (10/05/01)	1
	660–10860	N.D.E. Bracket from (10/05/01)	1
8	45–0295	N.D.E. Bearing Kit to (10/05/01)	1
	45–0340	N.D.E. Bearing Kit from (10/05/98)	1
9	462–12920	N.D.E. Bearing cartridge to (10/05/01)	1
	660–10862	N.D.E. Bearing cartridge from (10/05/01	1
10	366–40800	Exciter stator 75mm	1
11	QMSN	Main stator frame assy	1
12	660–11565	N.D.E. Air inlet cover (industrial)	1
	464–31600	N.D.E Air inlet cover (marine)	1
	464–32100	N.D.E. Air inlet cover (Airfilters)	1
13	QMSN	Main rotor assy	1
14	660–11565	Exciter rotor 75mm	1
15	464–31600	Rotating rectifier assy	1
16	RSK–6001	Diode fwd/rev & varistor kit	1
17	660–1005	Main terminal board	1
18	660–10653	Terminal box endpanel N.D.E.	1
	660–10655	Terminal box endpanel N.D.E. (PG Gland & diff protection)	1
	660–10925	Terminal box endpanel N.D.E. (HI–Reconnectable)	1
	660–11220	Terminal box endpanel N.D.E. HI–Airfilters)	1
	660–11604	Terminal box endpanel N.D.E. (Standard digital A.V.R)	1
19	660–10652	Terminal box endpanel D.E.	1
	660–10654	Terminal box endpanel D.E. (diff/protection)	1
	660–10784	Terminal box endpanel D.E. (PG Gland or standard digital A.V.R)	1
	660–10783	Terminal box endpanel D.E. (PG Gland diff protection)	1
	660–10924	Terminal box endpanel D.E. (HI–Reconnectable)	1
	660–11219	Terminal box endpanel D.E. (HI–Airfilters)	1
20	660–10650	Terminal box side panel	2
	660–11242	Terminal box side panel (Airfilter)	2
	660–10923	Terminal box side panel (HI–Reconnectable & A/F)	2
21	660–10651	Terminal box lid	1
22	450–15254	A.V.R. Cover plate (access)	1
	450–14310	A.V.R Cover plate (blanking)	1
23	45–0742	A.V.R. Mounting bracket	1

Copyright © 2016 Cummins Generator Technologies. All Rights Reserved.

HC634G to K – 2 Bearing (Continued)

24	E000–23412/1P	A.V.R. MX341 (standard series 3)	1
	E000–23408	A.V.R. MX341 UL	1
	E000–23212/1P	A.V.R. MX321	1
	E000–23215	A.V.R. MX321 UL	1
	E000–23800	A.V.R. DM110	1
25	003–14046	Auxiliary terminal board	2
26	003–14046	Auxiliary terminal board	2
27	45–0374	Heater 110–125 volt	1
	A040G624	Heater Kit 110–125v to include term box for retrofit	1
	45–0374	Heater 220–260 volt	1
	A040G610	Heater Kit 220–260v to include term box for retrofit	1
28	45–0024	Terminal box for heaters	1
29	464–15630	D.E. Bracket to (25/04/98)	1
	660–10868	D.E. Bracket from (25/04/98)	1
30	464–15650	D.E. Bracket screen	2
31	45–0659	D.E. Louvre	2
32	464–15090	D.E.Bearing cartridge to (25/04/98)	1
	660–10870	D.E.Bearing cartridge from (25/04/98)	1
33	45–0294	D.E. Bearing Kit to (25/04/98)	1
	45–0339	D.E. Bearing Kt from (25/04/98)	1
34	660–10074	D.E. Bearing cap outer to (25/04/98)	1
	660–10872	D.E. Bearing cap outer from (25/04/98)	1
35	45–0683	2 Brg Adaptor Kit (SAE 0)	1
	45–0682	2 Brg Adaptor Kit (SAE 00)	1
36	Included in 34	D.E. Cover Screen (Included in Kits)	1

Copyright © 2016 Cummins Generator Technologies. All Rights Reserved.

This page is Intentionally blank.

Copyright © 2016 Cummins Generator Technologies. All Rights Reserved.

HC734E to H 1 Bearing (Ser 3)

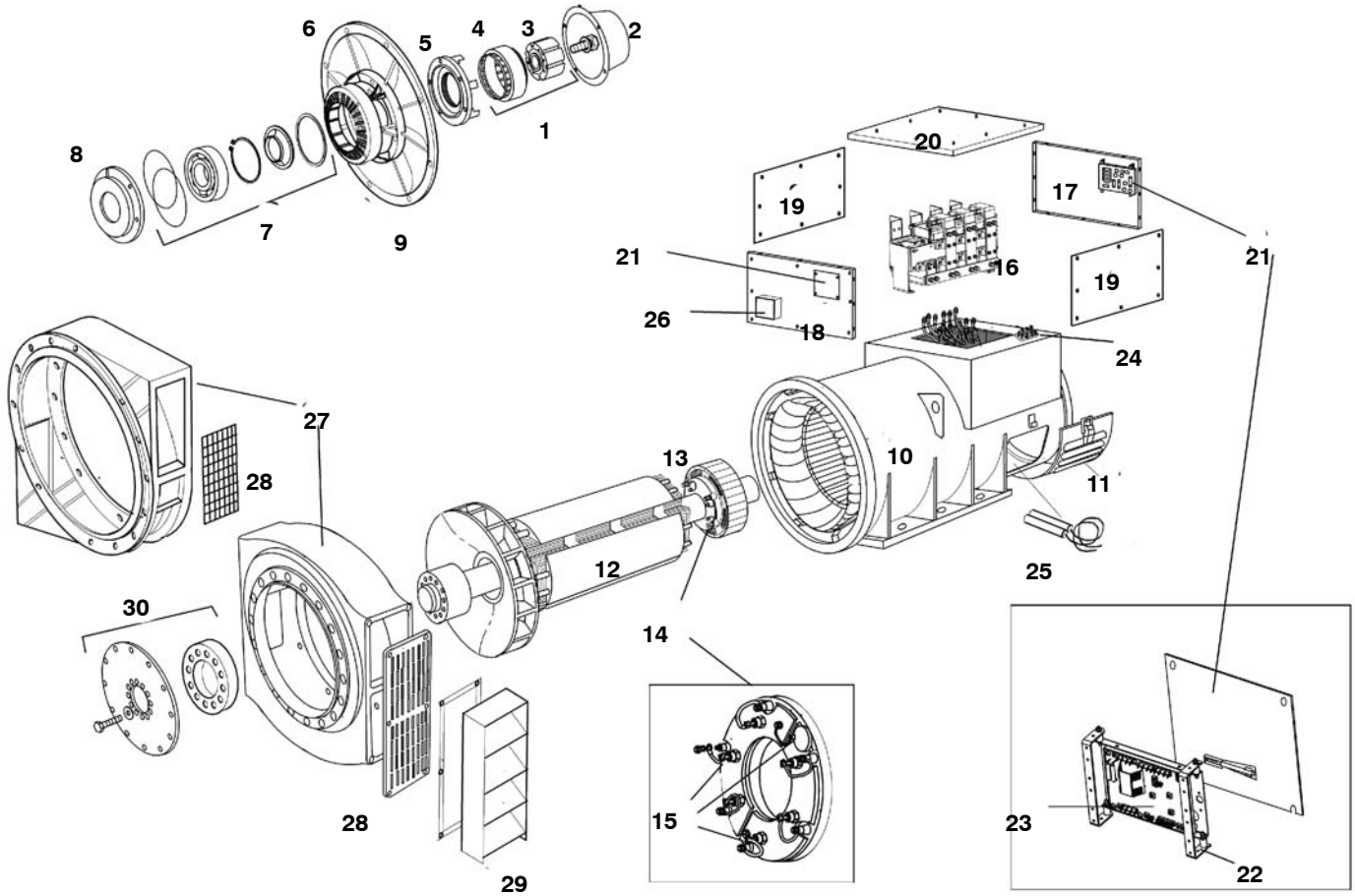

Copyright © 2016 Cummins Generator Technologies. All Rights Reserved.

HC734E to H 1 Bearing (Ser 3)

Item	Part No.	Description	Qty
1	45–0119A	Complete P.M.G. upfit kit (Current and Pre Nov 98)	1
	45–0397A	Complete P.M.G upfit kiT from (11/98) to 01/01)	1
2	760–10562	P.M.G. Cover (Cover included in above kit)	1
3	45–1082	Current P.M.G. rotor/stator repair kit	1
4	45–1082	Current P.M.G. rotor/stator repair kit	1
5	730–10235	N.D.E. Bearing cap to (11/98)	1
	760–10550	N.D.E. Bearing cap from (11/98 to 11/2000)	1
	760–10823	N.D.E. Bearing cap from (11/2000)	1
6	760–10122	N.D.E. Bracket G –H (to 3/07/99)	1
	760–10121	N.D.E. Bracket E – F (G & H from 4/07/99)	1
7	45–0301	N.D.E. Bearing Kit to (11/2000)	1
	45–0336	N.D.E. Bearing Kit from (11/2000)	1
8	730–10233	N.D.E. Bearing cartridge to (11/98)	1
	760–10568	N.D.E. Bearing cartridge from (11/98 to 11/2000)	1
	760–10821	N.D.E. Bearing cartridge from (11/2000)	1
9	366–40800	Exciter stator 75mm	1
10	QMSN	Main stator frame assy	1
11	366–21200	N.D.E. Air inlet cover	1
12	QMSN	Main rotor assy	1
13	760–1009	Exciter rotor 75mm	1
14	450–16025	Rotating rectifier assy	1
15	RSK–6001	Diode fwd/rev & varistor kit	1
16	760–1024	Main terminal board	1
17	760–10665	Terminal box endpanel N.D.E	1
18	760–10664	Terminal box endpanel D.E.	1
19	760–10662	Terminal box side panel	2
20	760–10663	Terminal box lid	1
21	450–15254	A.V.R. Cover plate (access)	1
	450–14310	A.V.R Cover plate (blanking)	1
22	45–0742	A.V.R. Mounting bracket	1
23	E000–23212/1P	A.V.R. MX321	1
	E000–23215	A.V.R. MX321 UL	1
24	003–14046	Auxiliary terminal board	2
25	45–0324	Heater 110–125 volt	1
	A051Y955	Heater Kit 110–125v to include term box for retrofit	1
	45–0325	Heater 220–260 volt	1
	A040G626	Heater Kit 220–260v to include term box for retrofit	1
26	45–0024	Terminal box for heaters	1
27	45–0674	D.E. Adaptor Kit SAE 0	1
	45–1012	D.E. Adaptor Kit SAE 00	1
28	760–10178	D.E. Screen (Included in Adaptor Kits)	1

Copyright © 2016 Cummins Generator Technologies. All Rights Reserved.

HC734E to H 1 Bearing (Ser 3) (Continued)

Item	Part No.	Description	Qty
29	45–0661	D.E. Louvre SAE 0	2
	45–0660	D.E. Louvre SAE–00	1
30	45–0792	Coupling Kit SAE 18	1
	45–0793	Coupling Kit SAE 21	1
	45–0794	Coupling Kit SAE 24	1

Copyright © 2016 Cummins Generator Technologies. All Rights Reserved.

This page is Intentionally blank.

Copyright © 2016 Cummins Generator Technologies. All Rights Reserved.

HC734E to H 2 Bearing (Ser 3)

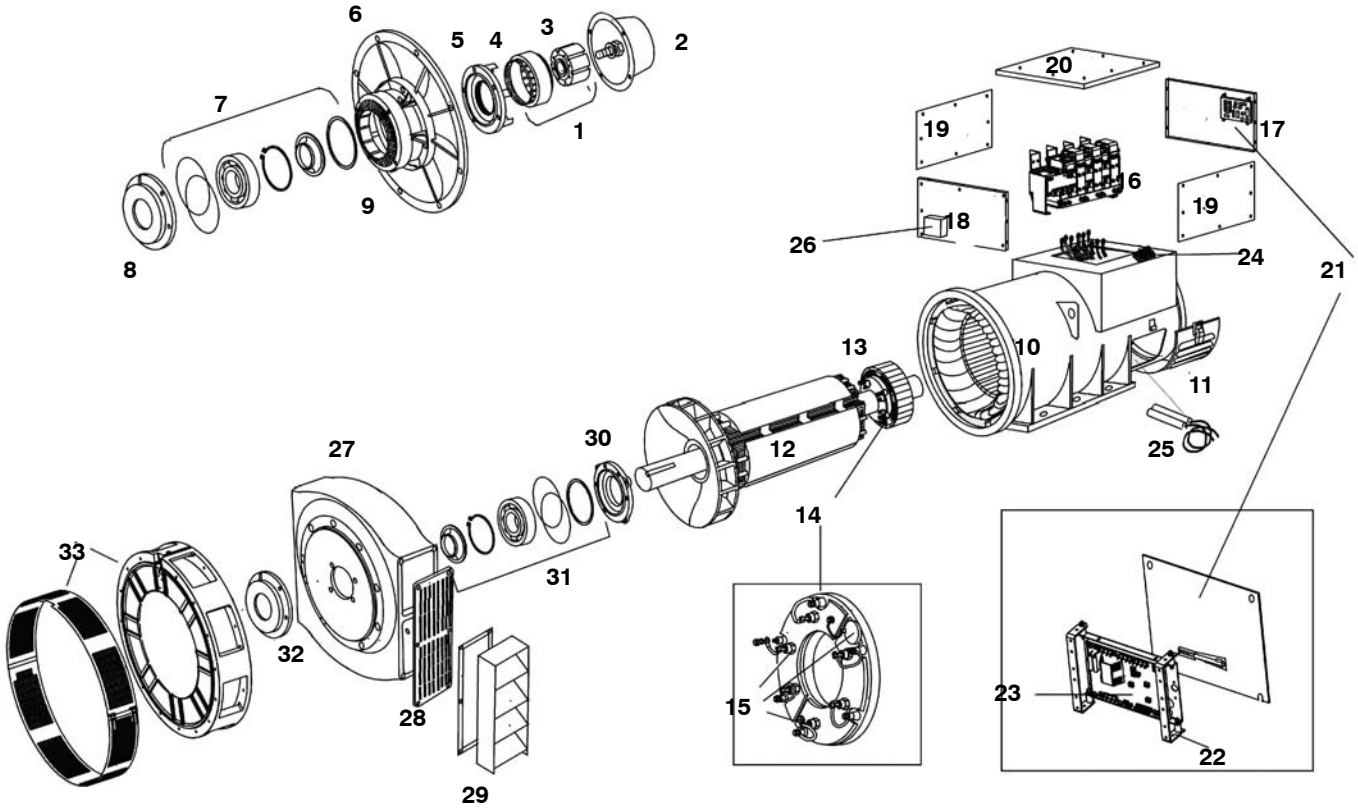

Copyright © 2016 Cummins Generator Technologies. All Rights Reserved.

HC734E to H 2 Bearing (Ser 3)

Item	Part No.	Description	Qty
1	45–0119A	Complete P.M.G. upfit kit (Current and Pre Nov 98)	1
	45–0397A	Complete P.M.G upfit kiT from (11/98) to 01/01) Obsolete	1
2	760–10562	P.M.G. Cover (Cover included in above kit)	1
3	45–1082	Current P.M.G. rotor/stator repair kit	1
4	45–1082	Current P.M.G. rotor/stator repair kit	1
5	730–10235	N.D.E. Bearing cap to (11/98)	1
	760–10550	N.D.E. Bearing cap from (11/98 to 11/2000)	1
	760–10823	N.D.E. Bearing cap from (11/2000)	1
6	760–10122	N.D.E. Bracket G –H (to 3/07/99)	1
	760–10121	N.D.E. Bracket E – F (G & H from 4/07/99)	1
7	45–0300	N.D.E. Bearing Kit to (11/2000)	1
	45–0336	N.D.E. Bearing Kit from (11/2000)	1
8	730–10233	N.D.E. Bearing cartridge to (11/98)	1
	760–10551	N.D.E. Bearing cartridge from (11/98 to 11/2000)	1
	760–10821	N.D.E. Bearing cartridge from (11/2000)	1
9	366–40800	Exciter stator 75mm	1
10	QMSN	Main stator frame assy	1
11	366–21200	N.D.E. Air inlet cover	1
12	QMSN	Main rotor assy	1
13	760–1009	Exciter rotor 75mm	1
14	450–16025	Rotating rectifier assy	1
15	RSK–6001	Diode fwd/rev & varistor kit	1
16	760–1024	Main terminal board	1
17	760–10665	Terminal box endpanel N.D.E	1
18	760–10664	Terminal box endpanel D.E.	1
19	760–10662	Terminal box side panel	2
20	760–10663	Terminal box lid	1
21	450–15254	A.V.R. Cover plate (access)	1
	450–14310	A.V.R Cover plate (blanking)	1
22	45–0742	A.V.R. Mounting bracket	1
23	E000–23212/1P	A.V.R. MX321	1
	E000–23215	A.V.R. MX321 UL	1
24	003–14046	Auxiliary terminal board	2
25	45–0324	Heater 110–125 volt	1
	A051Y955	Heater Kit 110–125v to include term box for retrofit	1
	45–0325	Heater 220–260 volt	1
	A040G626	Heater Kit 220–260v to include term box for retrofit	1
26	45–0024	Terminal box for heaters	1
27	760–10171	D.E. Bracket	1
28	760–10177	D.E. Bracket screen	2
29	45–0662	D.E. Louvre	1

Copyright © 2016 Cummins Generator Technologies. All Rights Reserved.

HC734E to H 2 Bearing (Ser 3) (Continued)

Item	Part No.	Description	Qty
30	366–13490	D.E. Bearing cartridge to (11/98)	2
	760–10552	D.E. Bearing cartridge from (11/98 TO 11/2000)	1
	760–10829	D.E. Bearing cartridge from (11/2000)	1
31	45–0298	D.E. Bearing Kit to (11/2000)	1
	45–0335	D.E. Bearing Kit from (11/2000)	1
32	760–10165	D.E. Bearing cap outer to (11/98)	1
	760–10553	D.E. Bearing cap outer from (11/98 to 11/2000)	1
	760–10831	D.E. Bearing cap outer from (11/2000)	1
33	45–0716	2 Brg Adaptor Kit SAE 0	1
	45–0715	2 Brg Adaptor Kit SAE 00	1
34	Included in 33	D.E. Cover screen (Included in Kits)	1

Copyright © 2016 Cummins Generator Technologies. All Rights Reserved.

This page is Intentionally blank.

Copyright © 2016 Cummins Generator Technologies. All Rights Reserved.

P7 – 1 Bearing

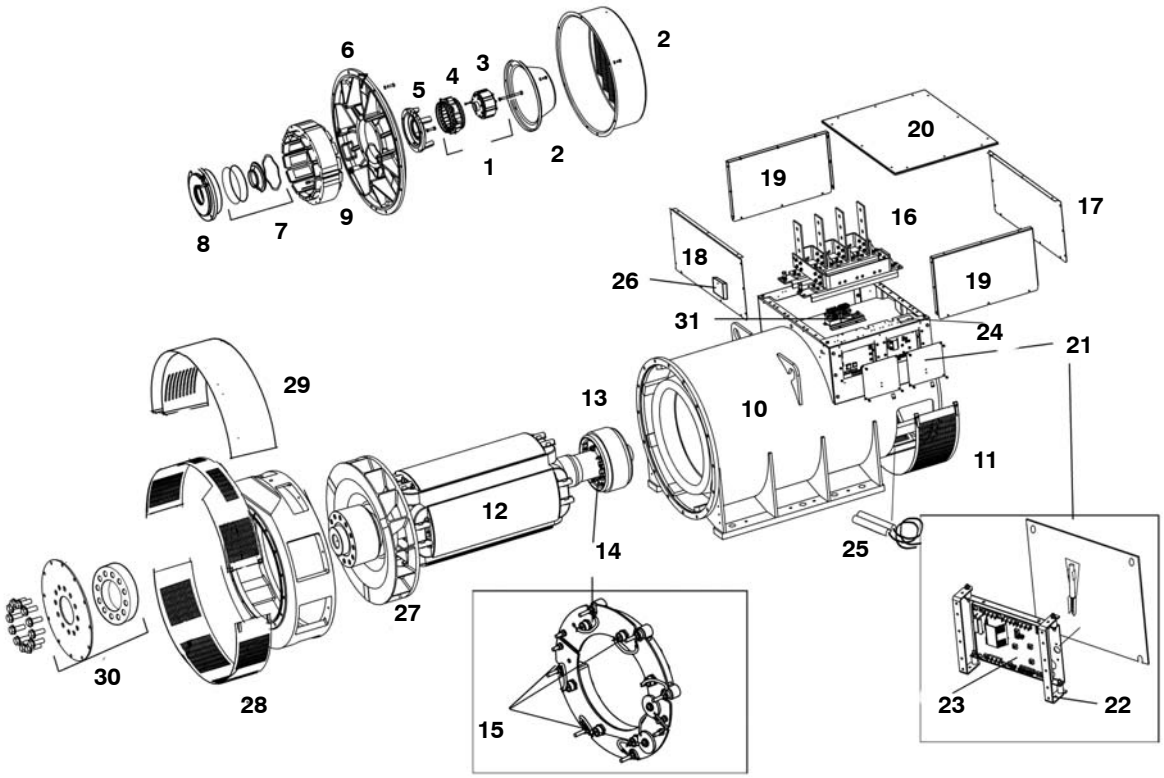

Copyright © 2016 Cummins Generator Technologies. All Rights Reserved.

P7 – 1 Bearing

Item	Part No.	Description	Qty
1	45–0119A	Complete P.M.G. upfit kit	1
2	760–10562	P.M.G.Cover (cover included in above kit)	1
2a	760–11279	N.D.E. Air inlet cover G core only	1
	760–10965	N.D.E. Air inlet cover G (marine)	1
	760–11005	N.D.E. Air inlet cover (circular)	1
3	45–1082	Current P.M.G. rotor/stator repair kit	1
4	45–1082	Current P.M.G. rotor/stator repair kit	1
5	760–10823	N.D.E. Bearing cap	1
	760–11026	N.D.E. Bearing cap for use with hardened cartridge	1
6	760–10819	N.D.E. Bracket A – F	1
	760–11205	N.D.E. Bracket G	1
7	45–0336	N.D.E. Regrease bearing kit	1
	45–1153	N.D.E. Regrease brg kit c/w caps & cartridges A– E	1
	45–0418	N.D.E. Sealed bearing kit	1
8	760–10821	N.D.E. Bearing cartridge	1
	760–11016	N.D.E Bearing cartridge (hardened)	1
9	366–40800	Exciter stator A – F (75mm)	1
	760–1151	Exciter stator G (100mm)	1
10	Q.M.S.N	Main stator frame assy	1
11	760–11274	N.D.E. Bottom cover A–F	1
	366–21200	N.D.E. Bottom cover (marine –louvered)	1
	366–21300	N.D.E. Bottom cover (airfilter)	1
12	Q.M.S.N	Main rotor assy	1
13	760–1186	Exciter rotor A –F (75mm)	1
	760–1178	Exciter rotor G,R,S,T (100mm)	1
14	760–11216	Rotating rectifier assy	1
15	RSK–6001	Diode fwd/rev & varistor kit	1
16	Q.M.S.N	Main terminal board	1
17	760–11185	Terminal box endpanel N.D.E. – standard	1
	760–11268	Terminal box endpanel N.D.E. – high box	1
	760–11594	Terminal box endpanel N.D.E. – std c/w airfilters	1
	A041B941	Terminal box endpanel N.D.E. – high c/w airfilters	1
	760–11594	Terminal box endpanel N.D.E. – std c/w airfilters marine	1
	A041B941	Terminal box endpanel N.D.E. – high c/w a/f (marine)	1
18	760–11185	Terminal box endpanel D.E. – standard	1
	760–11268	Terminal box endpanel D.E. – high box	1
	760–11185	Terminal box endpanel D.E. – std c/w airfilters	1
	760–11268	Terminal box endpanel D.E. – high c/w airfilters	1
	760–11185	Terminal box endpanel D.E. – std c/w airfilters marine	1
	760–11268	Terminal box endpanel D.E. – high c/w a/f (marine)	1

Copyright © 2016 Cummins Generator Technologies. All Rights Reserved.

P7 – 1 Bearing (Continued)

Item	Part No.	Description	Qty
19	760–11186	Terminal box side panel – standard	2
	760–11269	Terminal box side panel – high box	2
	760–11186	Terminal box side panel – std c/w airfilter	2
	760–11269	Terminal box side panel – high c/w airfilter	2
	760–11186	Terminal box side panel – std c/w airfilter marine	2
	760–11269	Terminal box side panel – high c/w a/f (marine)	2
20	760–10663	Terminal box lid – standard /high/airfilter & marine	1
21	450–15254	A.V. R. Cover plate (access)	1
	450–14310	A.V. R. Cover plate (blanking)	1
22	45–0742	A.V .R. Mounting bracket	1
23	E000–23412/1P	A.V. R. MX341 (standard series 3)	1
	E000–23408	A.V. R. MX341 UL	1
	E000–23212/1P	A.V. R. MX321	1
	E000–23215	A.V. R. MX321 UL	1
	E000–23800	A.V.R. DM110	1
24	450–15489	Auxiliary terminal board	1
25	45–0324	Heater 110–125 volt	1
	A051Y955	Heater Kit 110–125v to include term box for retrofit	1
	45–0325	Heater 220–260 volt	1
	A040G626	Heater Kit 220–260v to include term box for retrofit	1
	45–1047	Heater 110–125 volt (G core)	1
	45–1048	Heater 220–260 volt (G core)	1
26	45–0024	Terminal box for heaters	1
27	45–1011	D.E. Adaptor kit (S.A.E 0)	1
	45–1012	D.E. Adaptor kit (S.A.E 00)	1
28	See No. 29	D.E. Screen (included in adaptor kits)	1
29	45–1049	Louvre Kit S.A.E 00 – A –F	1
	45–1050	Louvre Kit S.A.E 00 – G	1
	45–1051	Louvre Kit S.A.E 0 –A – F	1
	45–1052	Louvre Kit S.A.E 0 – G	1
30	45–0792	Coupling Kit S.A.E 18 (standard)	1
	45–1005	Coupling Kit S.A.E 18 (special 12 hole)	1
	45–0793	Coupling Kit S.A.E 21	1
	45–0794	Coupling Kit S.A.E 24	1
31	450–42150	Isolation transformer 2 to 1 (up to 480v)	1
	450–41650	Isolation transformer 2.5 to 1 (500 to 600v)	1
	450–41750	Isolation transformer 3 to 1 (601 to 720v)	1

Copyright © 2016 Cummins Generator Technologies. All Rights Reserved.

This page is Intentionally blank.

Copyright © 2016 Cummins Generator Technologies. All Rights Reserved.

P7 – 2 Bearing

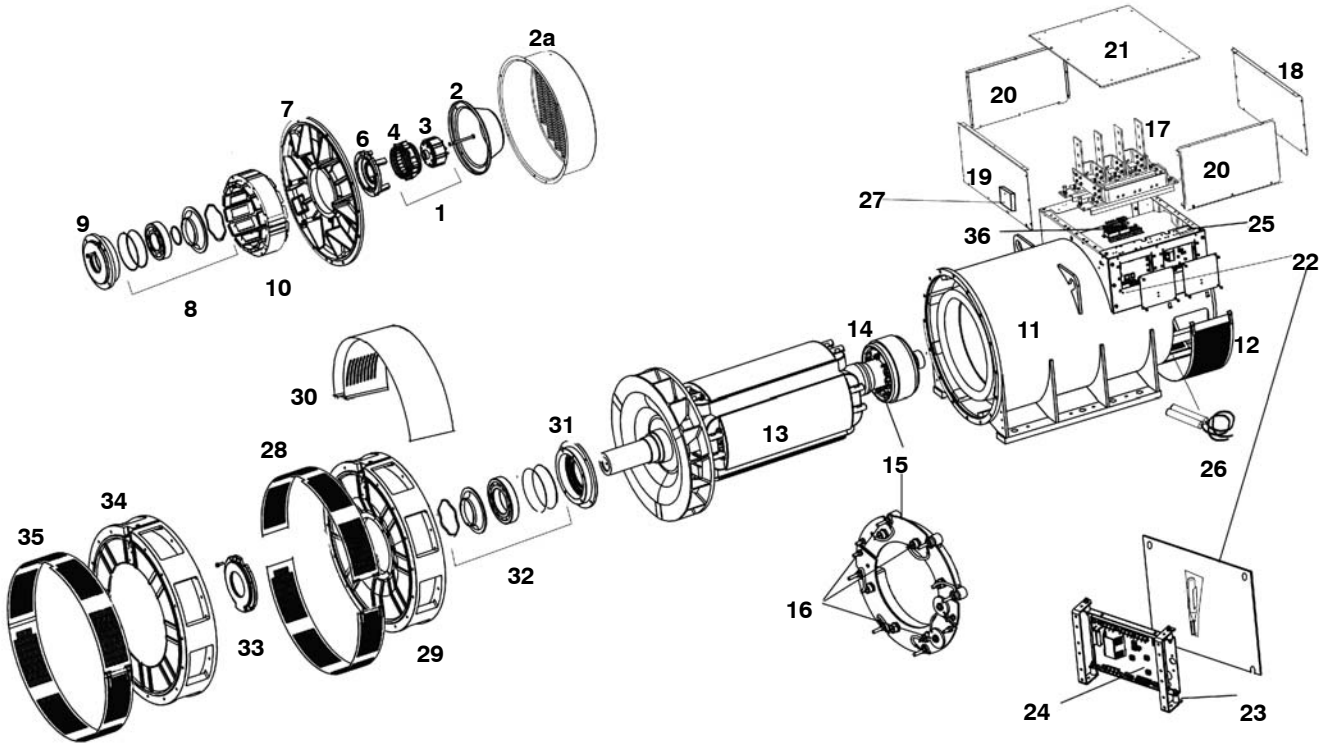

Copyright © 2016 Cummins Generator Technologies. All Rights Reserved.

P7 – 2 Bearing

Item	Part No.	Description	Qty
1	45–0119A	Complete P.M.G. upfit kit	1
2	760–10562	P.M.G. Cover (cover included in above kit)	1
2a	760–11279	N.D.E. Air inlet cover G	1
	760–10965	N.D.E. Air inlet cover G (marine)	1
	760–11005	N.D.E. Air inlet cover (circular)	1
3	45–1082	Current P.M.G. rotor/stator repair kit	1
4	45–1082	Current P.M.G. rotor/stator repair kit	1
5	Not Applicable	P.M.G Crown (if fitted)	N/A
6	760–10823	N.D.E. Bearing cap	1
	760–11026	N.D.E. Bearing cap for use with hardened cartridge	1
7	760–10819	N.D.E. Bracket A –F	1
	760–11205	N.D.E. Bracket G	1
8	45–0336	N.D.E. Regrease bearing kit	1
	45–1153	N.D.E. Regrease brg kit c/w caps & cartridges A – E	1
	45–0419	N.D.E. Sealed bearing kit	1
9	760–10821	N.D.E.Bearing cartridge	1
	760–11016	N.D.E Bearing cartridge (hardened)	1
10	366–40800	Exciter stator A – F (75mm)	1
	760–1151	Exciter stator G (100mm)	1
11	Q.M.S.N	Main stator frame assy	1
12	760–11274	N.D.E. Bottom cover A–F	1
	366–21200	N.D.E. Bottom cover (marine –louvered)	1
	366–21300	N.D.E. Bottom cover (airfilter) A–F	1
13	Q.M.S.N	Main rotor assy	1
14	760–1186	Exciter rotor A –F (75mm)	1
	760–1178	Exciter rotor G,R,S,T (100mm)	1
15	760–11216	Rotating rectifier assy	1
16	RSK–6001	Diode fwd/rev & varistor kit	1
17	Q.M.S.N	Main terminal board	1
18	760–11185	Terminal box endpanel N.D.E. – standard	1
	760–11268	Terminal box endpanel N.D.E. – high box	1
	760–11594	Terminal box endpanel N.D.E. – std c/w airfilters	1
	A041B941	Terminal box endpanel N.D.E. – high c/w airfilters	1
	760–11594	Terminal box endpanel N.D.E. – std c/w airfilters marine	1
	A041B941	Terminal box endpanel N.D.E. – high c/w a/f (marine)	1
19	760–11185	Terminal box endpanel D.E. – standard	1
	760–11268	Terminal box endpanel D.E. – high box	1
	760–11185	Terminal box endpanel D.E. – std c/w airfilters	1
	760–11268	Terminal box endpanel D.E. – high c/w airfilters	1
	760–11185	Terminal box endpanel D.E. – std c/w airfilters marine	1
	760–11268	Terminal box endpanel D.E. – high c/w a/f (marine)	1

Copyright © 2016 Cummins Generator Technologies. All Rights Reserved.

P7 – 2 Bearing (Continued)

Item	Part No.	Description	Qty
20	760–11186	Terminal box side panel – standard	2
	760–11269	Terminal box side panel – high box	2
	760–11186	Terminal box side panel – std c/w airfilter	2
	760–11269	Terminal box side panel – high c/w airfilter	2
	760–11186	Terminal box side panel – std c/w airfilter marine	2
	760–11269	Terminal box side panel – high c/w a/f (marine)	2
21	760–10663	Terminal box lid – standard /high/airfilter & marine	1
22	450–15254	A.V.R. Cover plate (access)	1
	450–14310	A.V.R.Cover plate (blanking)	1
23	45–0742	A.V.R. Mounting bracket	1
24	E000–23412/1P	A.V.R.MX341 (standard series 3)	1
	E000–23408	A.V.R. MX341 UL	1
	E000–23212/1P	A.V.R. MX321	1
	E000–23215	A.V.R.MX321 UL	1
	E000–23800	A.V.R. DM110	1
25	450–15489	Auxiliary terminal board	1
26	45–0324	Heater 110–125 volt	1
	A051Y955	Heater kit 110–125v to include term box for retrofit	1
	45–0325	Heater 220–260 volt	1
	A040G626	Heater kit 220–260v to include term box for retrofit	1
	45–1047	Heater 110–125 volt (g core)	1
	45–1048	Heater 220–260 volt (g core)	1
27	45–0024	Terminal box for heaters	1
28	760–11160	D.E. Bracket A – E	1
	760–10912	D.E. Bracket F – G	1
29	760–11392	D.E. Bracket screen top (industrial)	1
	760–10930	D.E. Bracket screen bottom	1
30	45–1053	Louvre kit A – F	1
	45–1054	Louvre kit G	1
31	760–10829	D.E. Bearing cartridge A – E	1
	760–10923	D.E. Bearing cartridge F – G	1
32	45–0335	D.E. Regrease bearing kit A – E	1
	45–1154	D.E Brg kit c/w caps & cartridges A – E	1
	45–1077	N.D.E. & D.E brg kit complete A – E	1
	45–0425	D.E. Bearing kit F – G	1
	45–1155	D.E Brg kit c/w caps & cartridges F – G	1
	45–1078	N.D.E. & D.E brg kit complete F – G	1
33	760–10831	D.E. Bearing cap A –E	1
	760–10924	D.E. Bearing cap F– G	1
34	45–0715	2 Brg adaptor kit SAE 00 A – E only	1
	45–0716	2 Brg adaptor kit SAE 0 A – E only	1
	A051Y983	2 Brg adaptor kit SAE 0 F – G only	1
	45–1038	2 Brg adaptor kit SAE 00 F– G only	1
35	Included in 34	D.E. cover screen (included in kits)	1

Copyright © 2016 Cummins Generator Technologies. All Rights Reserved.

Item	Part No.	Description	Qty
36	450–42150	Isolation transformer 2 to 1 (up to 480v)	1
	450–41650	Isolation transformer 2.5 to 1 (500 to 600v)	1
	450–41750	Isolation transformer 3 to 1 (601 to 720v)	1

Copyright © 2016 Cummins Generator Technologies. All Rights Reserved.

Frame 8 Mk2 1 Bearing

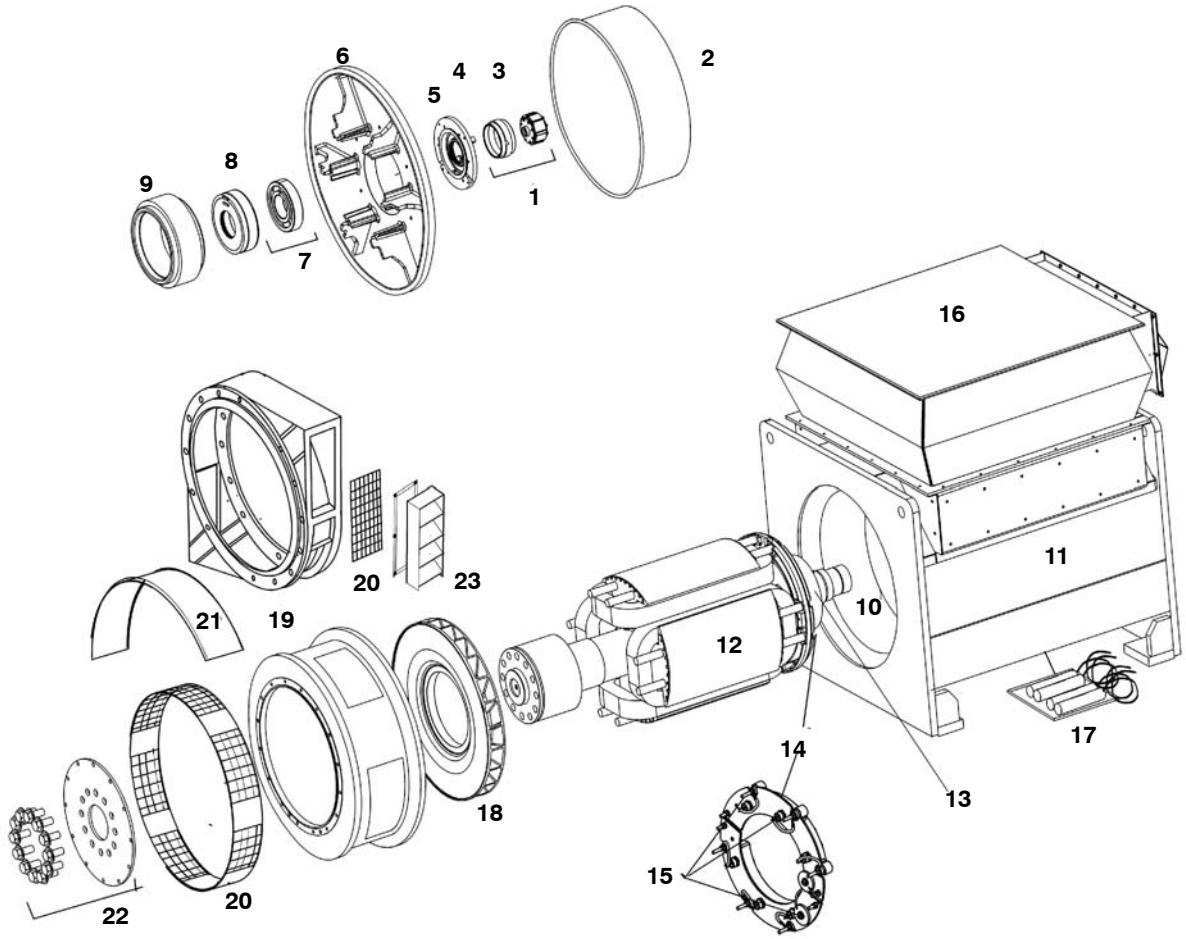

Copyright © 2016 Cummins Generator Technologies. All Rights Reserved.

Frame 8 Mk2 1 Bearing

Item	Part No.	Description	Qty
1	45–1082	Complete P.M.G. kit	1
2	800–10481	N.D.E cover	1
3	SEE ITEM 1	Current P.M.G. rotor/stator repair kit	1
4	SEE ITEM 1	Current P.M.G. rotor/stator repair kit	1
5	820–10186	N.D.E. Cap	1
6	800–10602	N.D.E. Endbracket	1
7	45–0402	N.D.E Bearing kit	1
8	820–10185	N.D.E. Bearing cartridge	1
9	800–1023	Exciter stator	1
10	QMSN	Main stator frame assy	1
11	QMSN	Main stator panel work	4
12	QMSN	Main rotor assy	1
13	800–1024	Exciter rotor	1
14	810–1015	Rectifier assy	1
15	RSK–6001	Diode Fwd/Rev & Varistor Kit	1
16	QMSN	Complete terminal box assy	1
17	45–0324	Heater Kit	2
18	800–10442	Fan clockwise rotation	1
	800–10447	Fan anti–clockwise rotation	1
19	45–1147	Adaptor Kit SAE 0 C D & E	1
	45–1148	Adaptor Kit SAE 00 C D & E	1
	45–1149	Adaptor Kit MHI	1
20	QMSN	Adaptor screen (included in adaptor kits)	2
21	800–10607	Drip proof cover	2
22	45–1144	Coupling Kit SAE 18	1
	45–1145	Coupling Kit SAE 21	1
	45–1146	Coupling Kit SAE 24	1
23	45–1150	Louvre	1
	E000–13300	A.V.R. MA330 (not shown)	1

Copyright © 2016 Cummins Generator Technologies. All Rights Reserved.

Frame 8 Mk2 2 Bearing

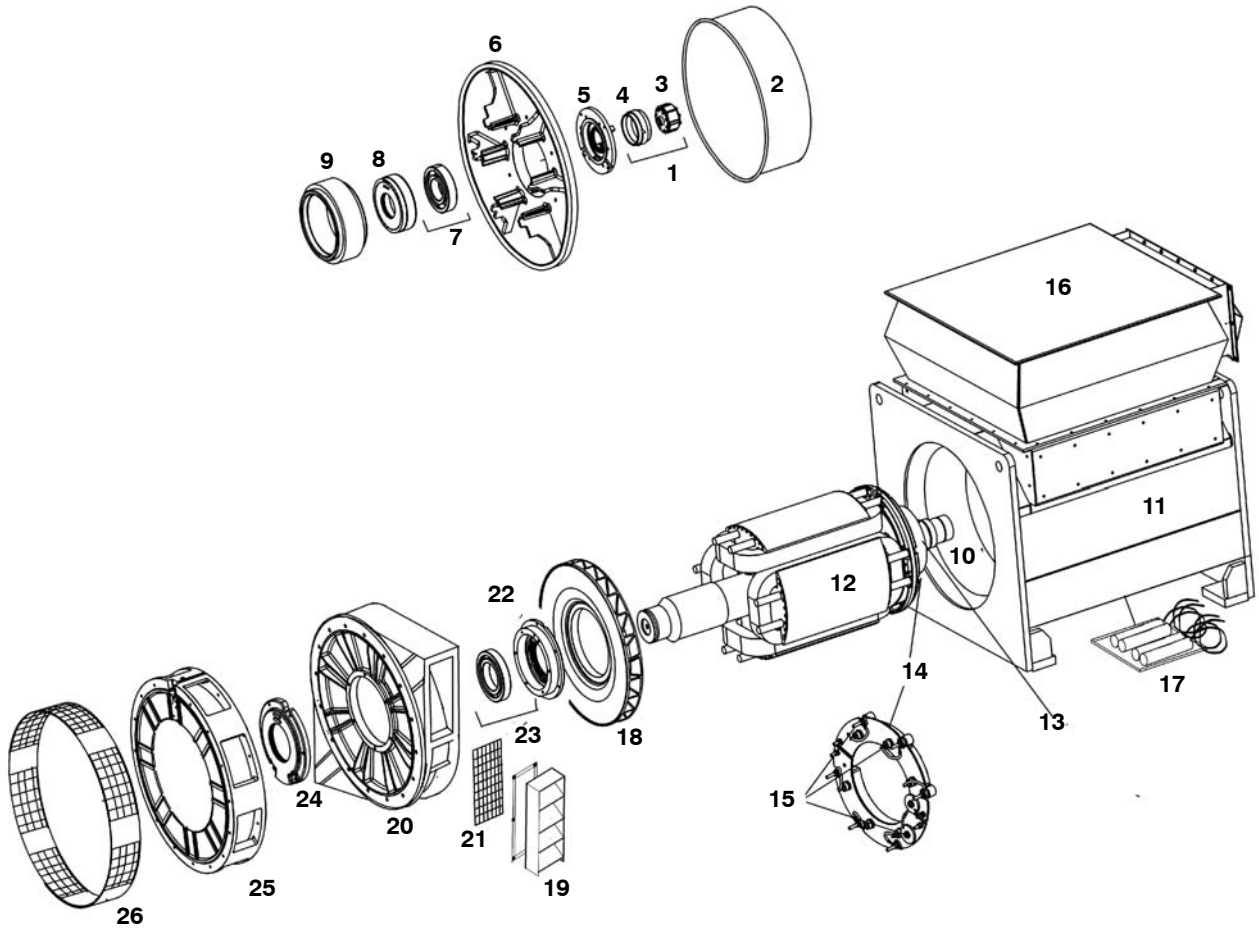

Copyright © 2016 Cummins Generator Technologies. All Rights Reserved.

Frame 8 Mk2 2 Bearing

Item	Part No.	Description	Qty
1	45–1082	Complete P.M.G. Kit	1
2	800–10481	N.D.E Cover	1
3	See No.1	Current P.M.G. rotor/stator repair kit	1
4	See No.1	Current P.M.G. rotor/stator repair kit	1
5	820–10186	N.D.E. Cap	1
6	800–10602	N.D.E. Endbracket C – E	1
	800–10309	N.D.E. Endbracket F– G	1
7	45–0402	N.D.E. Bearing Kit	1
8	820–10185	N.D.E. Bearing cartridge	1
9	800–1023	Exciter stator	1
10	QMSN	Main stator frame assy	1
11	QMSN	Main stator panel work	4
12	QMSN	Main rotor assy	1
13	800–1024	Exciter rotor	1
14	810–1015	Rectifier assy	1
15	RSK–6001	Diode Fwd/Rev & Varistor Kit	1
16	QMSN	Complete terminal box assy	1
17	45–0324	Heater Kit	2
18	800–10442	Fan clockwise rotation	1
	800–10447	Fan anti–clockwise rotation	1
19	45–1150	Louvre	1
20	800–10464	D.E. Bracket C – E (clockwise)	1
	800–10313	D.E. Bracket F – G (clockwise)	1
	800–10466	D.E. Bracket C – E (anti–clockwise)	1
	800–10466	D.E. Bracket F – G (anti–clockwise)	1
21	760–10728	D.E. Bracket screen C – E	2
	800–10983	D.E. Bracket screen F – G	2
22	800–10475	D.E. Bearing cartridge C – E	1
	820–10137	D.E. Bearing cartridge F – G	1
23	45–0399	D.E. Bearing kit C – E	1
	45–0401	D.E. Bearing kit F– G	1
24	800–10477	D.E. Bearing cap C – E	1
	820–10138	D.E. Bearing cap F – G	1
25	45–1220	Adaptor Kit SAE 0 C – E	1
	45–1135	Adaptor Kit SAE 00 C – E (32 hole)	1
	45–1136	Adaptor Kit SAE 0 F – G	1
	45–1137	Adaptor Kit SAE 00 F– G	1
	45–1138	Adaptor kit SAE 00 F– G (32 hole)	1
	45–1134	Adaptor kit special C – E	1
26	See Item 26	Adaptor screen (comes with kit)	1
	E000–13300	A.V .R MA330 (not shown)	1

Copyright © 2016 Cummins Generator Technologies. All Rights Reserved.

P80 – 1 Bearing

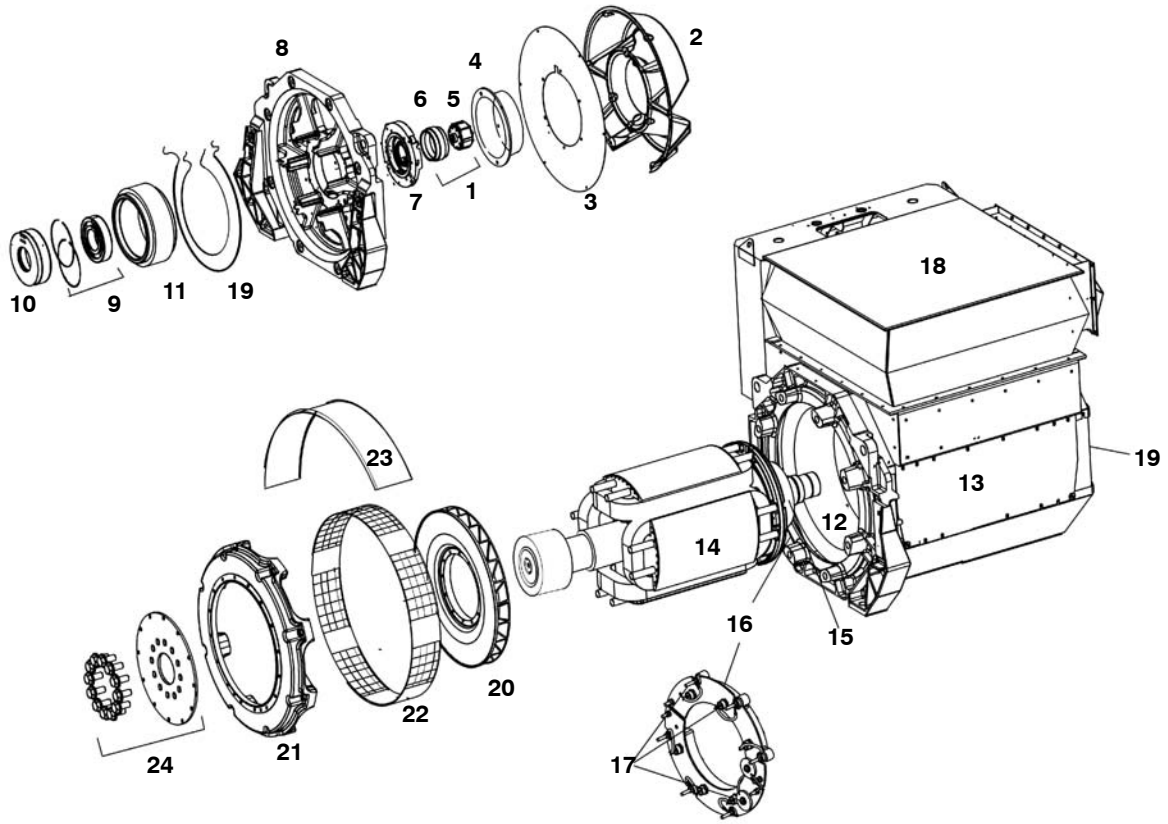

Copyright © 2016 Cummins Generator Technologies. All Rights Reserved.

P80 – 1 Bearing

Item	Part No.	Description	Qty
1	45–1082	Complete P.M.G. Kit	1
2	800–30254	N.D.E Air inlet cover	1
3	800–30060	N.D.E Air inlet screen	1
4	450–14360	P.M.G Cover (metal)	1
5	SEE ITEM. 1	Current P.M.G. rotor/stator repair kit	1
6	SEE ITEM. 1	Current P.M.G. rotor/stator repair kit	1
7	800–30017	N.D.E. Cap	1
8	800–30020	N.D.E. Endbracket	1
9	45–0407	N.D.E Bearing Kit	1
	45–1118	N.D.E. Bearing Kit c/w caps & cartridges R,S,T,X	1
10	800–30015	N.D.E. Bearing cartridge	1
11	800–1055	Exciter stator R – T	1
	800–1056	Exciter stator W – Y	1
12	QMSN	Main stator frame assy	1
13	QMSN	Main stator panel work	1
14	QMSN	Main rotor assy	1
15	800–1048	Exciter rotor R – T	1
	800–1049	Exciter rotor W – Y	1
16	810–1015	Rectifier assy	1
17	RSK–6001	Diode Fwd/Rev & Varistor Kit	1
18	QMSN	Complete terminal box assy	1
19	45–1029	Heater Kit	1
20	800–30049	Fan (clockwise)	1
	800–30014	Fan (anti–clockwise)	1
21	45–1139	Adaptor SAE 0	1
	45–1140	Adaptor SAE 00	1
	45–1141	Adaptor special R – T mhi	1
22	SEE ITEM 30	D.E. Adaptor screen (included in adaptor kit)	2
23	800–30186	Drip proof cover	1
24	45–1144	Coupling Kit SAE 18	1
	45–1145	Coupling Kit SAE 21	1
	45–1146	Coupling Kit SAE 24	1
25	E000–13300	MA330 AVR (not shown)	1
	E000–23800	DM110 AVR (not shown)	1
	A044W728	UNITROL 1010 Basic (not shown)	1
	A044W725	UNITROL 1010 Light (not shown)	1

Copyright © 2016 Cummins Generator Technologies. All Rights Reserved.

P80 – 2 Bearing

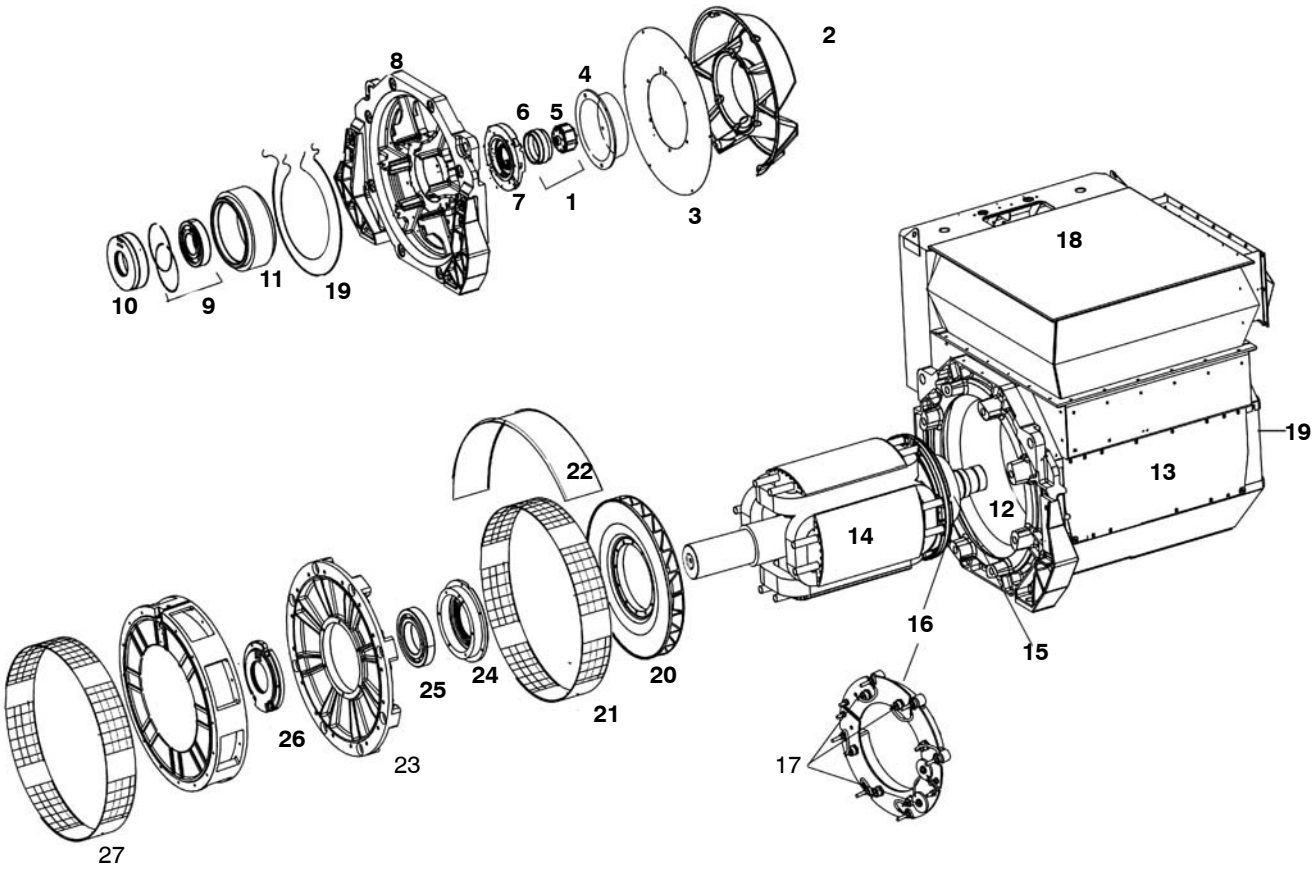

Copyright © 2016 Cummins Generator Technologies. All Rights Reserved.

P80 – 2 Bearing

Item	Part No.	Description	Qty
1	45–1082	Complete P.M.G. Kit	1
2	800–30254	N.D.E Air inlet cover	1
3	800–30060	N.D.E Air inlet screen	1
4	450–14360	P.M.G Cover (metal)	1
5	See No. 1	Current P.M.G. rotor/stator repair kit	1
6	See No. 1	Current P.M.G. rotor/stator repair kit	1
7	800–30017	N.D.E. Cap	1
8	800–30020	N.D.E. Endbracket	1
9	45–0407	N.D.E Bearing Kit	1
	45–1118	N.D.E. Bearing Kit c/w caps & cartridges R,S,T,X	1
10	800–30015	N.D.E. Bearing cartridge	1
11	800–1055	Exciter stator R – T	1
	800–1056	Exciter stator W – Y	1
12	QMSN	Main stator frame assy	1
13	QMSN	Main stator panel work	1
14	QMSN	Main rotor assy	1
15	800–1048	Exciter rotor R – T	1
	800–1049	Exciter rotor W – Y	1
16	810–1015	Rectifier assy	1
17	RSK–6001	Diode Fwd/Rev & Varistor Kit	1
18	QMSN	Complete terminal box assy	1
19	45–1029	Heater Kit	1
20	800–30049	Fan (clockwise)	1
	800–30014	Fan (anti–clockwise)	1
21	800–30187	D.E. Bracket screen	2
22	800–30186	Drip proof cover	1
23	800–30022	D.E. Bracket R – T	1
	800–30165	D.E. Bracket W – Y	1
24	800–10475	D.E. Bearing cartridge R – T	1
	820–10137	D.E. Bearing cartridge W – Y	1
25	45–0408	D.E. Bearing Kit R –T	1
	45–0409	D.E. Bearing Kit W – Y	1
	45–1119	D.E. Bearing Kit c/w caps & cartridges R,S, & T	1
	45–1120	D.E. Bearing Kit c/w caps & cartridges W,X & Y	1
	45–1151	D.E. & N.D.E Complete brg kit R,S & T	1
	45–1152	D.E. & N.D.E Complete brg kit W,X & Y	1
26	800–10477	D.E. Bearing cap R – T	1
	820–10138	D.E. Bearing cap W– Y	1
27	45–1142	Adaptor Kit SAE 0 R – T	1
	45–1135	Adaptor Kit SAE 00 R –T (32 hole)	1
	45–1136	Adaptor Kit SAE 0 W – Y	1
	45–1137	Adaptor Kit SAE 00 W – Y	1

Copyright © 2016 Cummins Generator Technologies. All Rights Reserved.

P80 – 2 Bearing (Continued)

Item	Part No.	Description	Qty
	45–1138	Adaptor Kit SAE 00 W – Y (32 hole)	1
28	SEE ITEM 27	Adaptor screen (included in adaptor kit)	1
29	E000–13300	MA330 AVR (not shown)	1
	E000–23800	DM110 AVR (not shown)	1
	A044W728	UNITROL 1010 Basic (not shown)	1
	A044W725	UNITROL 1010 Light (not shown)	1

Copyright © 2016 Cummins Generator Technologies. All Rights Reserved.

ACCESSORIES

Range	Description	Part Number	Comments
	DROOP KITS		
UC	DROOP KIT	45–0092	
ALL BC	DROOP KIT	45–0193	
HC4	DROOP KIT	45–0583	
HC5	DROOP KIT	45–0588	
HC6 & 7	DROOP KIT	45–0691	
P7	DROOP KIT	45–1024	4 Pole = Amp 1200–1999, 2400–4000
			6 Pole = Amp 900–1499, 1800–3000
P7	DROOP KIT	45–1030	4 Pole = Amp < 1200, 2000–2399
			6 Pole = Amp < 900, 1500–1799
	AIRFILTER KITS		
UC22	AIRFILTER KIT	45–0875	
UC27	AIRFILTER KIT	45–0878	To end of October 2005
ALL BC	AIRFILTER KIT	45–0769	From November 2005
HC4	AIRFILTER KIT	45–0883	
HC5	AIRFILTER KIT	45–0315	
P7	AIRFILTER KIT	45–1023	Standard Terminal Box Industrial
P7	AIRFILTER KIT	45–1039	Standard Terminal Box Marine
P7	AIRFILTER KIT	45–1062	High Terminal Box Industrial
P7	AIRFILTER KIT	45–1063	High Terminal Box Marine
P7	AIRFILTER KIT	G CORE	Not currently covered by a kit
	TERMINAL BOX ASSY		
ALL BC	TERMINAL BOX STD ASSY	45–0861	
ALL BC	TERMINAL BOX STD ASSY	45–1027	
BC184 H–J CORE	3PH TERMINAL BOX KIT	45–1040	

Copyright © 2016 Cummins Generator Technologies. All Rights Reserved.

This page is Intentionally blank.

Copyright © 2016 Cummins Generator Technologies. All Rights Reserved.

Numerical Index

Part No. Page

003–14046, **51** , **108** , **111** , **115**
003–14055, **104**
130–10834, **51**
130–1379, **37** , **41**
130–1380, **37** , **41** , **45** , **49** , **51** , **53** , **57**
130–1381, **37** , **41** , **45** , **51** , **53** , **57** , **59** , **63**
130–1383, **51** , **59** , **63**
130–1384, **37** , **41**
130–1385, **37** , **41** , **45** , **49** , **51** , **53** , **57**
130–1386, **37** , **41** , **45** , **51** , **53** , **57** , **59** , **63**
130–1388, **51** , **59** , **63**
130–1800, **59** , **63**
130–1801, **59** , **63**
130–20308, **51**
130–20318, **51**
130–20661, **37** , **41** , **45** , **49** , **51** , **53** , **57** , **59** , **63**
130–20667, **37** , **41** , **45** , **49** , **53** , **57** , **59** , **63**
130–20685, **38** , **46** , **53** , **60**
130–20745, **37** , **41** , **45** , **49** , **51**
130–20773, **42** , **49**
130–20774, **57** , **64**
130–20786, **45** , **51** , **53** , **57** , **59** , **63**
130–20800, **37** , **41**
130–20802, **45** , **49** , **51** , **63**
130–20819, **37** , **41** , **45** , **49** , **53** , **57** , **59** , **63**
130–20820, **37** , **41** , **45** , **49** , **53** , **57** , **59** , **63**
130–20821, **37** , **41** , **45** , **49** , **53** , **57** , **59** , **63**
130–20830, **37** , **41** , **45** , **49**
130–20831, **53** , **57**
130–20832, **51** , **59** , **63**
130–20834, **45** , **49**
130–20836, **37** , **41** , **53** , **57**
130–20916, **63**

Part No. Page

130–20928, **57** , **63**
130–20993, **37** , **41** , **45** , **49** , **53** , **57** , **59** , **63**
130–20998, **45** , **51**
130–20999, **45** , **51**
130–21000, **45** , **51**
130–21001, **45** , **51**
130–21003, **51**
130–21004, **51**
130–21005, **51**
130–21006, **51**
130–21325, **38** , **41** , **45** , **49** , **53** , **57** , **60** , **63**
130–21385, **37** , **41**
130–21602, **41** , **49**
130–21627, **59** , **63**
130–21628, **59** , **63**
130–22000, **37** , **41** , **45** , **49** , **51** , **53** , **57** , **59** , **63**
130–22002, **37** , **41** , **49**
130–22003, **49**
130–22004, **49** , **59** , **63**
130–22005, **53** , **57** , **59** , **63**
130–22007, **37** , **41**
130–22008, **37** , **41** , **45** , **49** , **53** , **57** , **59** , **63**
130–22011, **59** , **63**
130–22021, **37** , **41**
130–22022, **37** , **41** , **53** , **57**
190–10016, **13**
190–10018, **9** , **13** , **17** , **21**
190–10025, **9** , **13** , **17** , **21**
190–10027, **9** , **13** , **17** , **22**
190–10035, **17** , **21**
190–10043, **13**
190–10044, **13**
190–1038, **9** , **13**
190–1039, **9** , **13** , **17** , **21**
190–1040, **9** , **13**
190–1041, **9** , **13** , **17** , **21** , **29**

191–10029, **22**

Part No. Page

191–10042, **9** , **13** , **18** , **22**
191–10045, **9** , **13** , **17** , **21**
191–10055, **17** , **21**
191–10056, **18** , **22**
191–10057, **9** , **13** , **17** , **21**
191–10059, **18** , **22**
191–10061, **9** , **13** , **17** , **21**
191–10091, **9** , **13** , **17** , **21**
191–10119, **22**
191–1063, **17** , **21** , **29**
191–1064, **17** , **21** , **33**
191–1067, **17** , **21**
191–1068, **17** , **21**
191–1069, **17** , **21**
191–1072, **17** , **21** , **29**
210–10121, **76**
210–1036, **71** , **75**
210–1037, **59** , **67** , **71** , **75** , **79** , **83**
230–10001, **68** , **72** , **76** , **80** , **84**
230–10054, **71** , **75**
230–10069, **71** , **75**
230–10073, **76**
230–10270, **71** , **75**
230–10336, **71** , **75**
230–10337, **71** , **75**
230–10338, **71** , **75**
230–10340, **71** , **75**
230–10341, **71** , **75**
230–10342, **59** , **71** , **75**
230–10565, **71** , **75**
230–10566, **71** , **75**
230–10567, **71** , **75**
230–10568, **71** , **75**
230–10571, **71** , **75**
230–10573, **71** , **75**
230–10574, **71** , **75**
230–10575, **71** , **75**
230–10580, **71** , **75**
230–10583, **71** , **75**

Part No. Page

230–10587, **71** , **75**
230–10599, **71** , **75**
230–10627, **71** , **75**
230–1495, **71** , **75**
230–1497, **67** , **71** , **75** , **79** , **83**
310–10049, **85**
310–1028, **67** , **79** , **83**
310–10400, **80**
330–10002, **67** , **79** , **83**
330–10020, **67** , **79** , **83**
330–10069, **68** , **80** , **84**
330–10076, **84**
330–10099, **67** , **79** , **83**
330–10137, **67** , **79** , **83**
330–10258, **67** , **79** , **83**
330–10381, **67** , **79** , **83**
330–10382, **67** , **79** , **83**
330–10383, **67** , **79** , **83**
330–10384, **67** , **79** , **83**
330–10386, **67** , **79** , **83**
330–10387, **67** , **79** , **83**
330–10388, **67** , **79** , **83**
330–10389, **67** , **79** , **83**
330–10600, **67** , **79** , **84**
330–10601, **67** , **79** , **83**
330–10602, **67** , **79** , **83**
330–10603, **67** , **79** , **84**
330–10605, **67** , **79** , **84**
330–10606, **68** , **80** , **84**
330–10609, **68** , **84**
330–10611, **67** , **79** , **84**
330–10612, **68** , **80** , **84**
330–10613, **67** , **79** , **84**
330–10614, **68** , **80** , **84**
330–10615, **68** , **80** , **84**
330–10617, **67** , **79** , **84**
330–10620, **67** , **79** , **84**
330–10622, **67** , **79** , **83**
330–10630, **67** , **79** , **83**
330–10634, **67** , **79** , **83**
330–10636, **68** , **80** , **84**

Copyright © 2016 Cummins Generator Technologies. All Rights Reserved.

Numerical Index (Continued)

Part No. Page

330–1280, **67** , **79** , **83**
366–13490, **116**
366–21200, **111** , **115** , **119** , **123**
366–21300, **119** , **123**
366–40800, **103** , **107** , **111** , **115** , **119** , **123**
410–10173, **87** , **91**
410–10256, **87** , **91**
410–10268, **87** , **91** , **95** , **99**
410–10269, **92**
410–10494, **87** , **91**
410–10495, **87** , **91**
410–10496, **87** , **91**
410–10497, **87** , **91**
410–1052, **87** , **91** , **95** , **99**
410–10536, **68** , **71** , **75** , **80** , **84** , **87** , **91**
410–10703, **87** , **91**
410–10704, **87** , **91** , **95** , **99**
410–10705, **87** , **91** , **95** , **99**
410–10708, **92**
410–10720, **87** , **91**
410–10762, **88**
410–10781, **92**
410–10784, **87** , **91**
410–10785, **87** , **91**
410–10786, **87** , **91**
410–10788, **87** , **91**
410–10789, **87** , **91**
410–10790, **87** , **91**
410–10799, **87** , **91**
410–10803, **87** , **91**
410–10819, **87** , **91**
410–1194, **87** , **91**
45–0024, **37** , **41** , **45** , **49** , **51** , **53** , **57** , **59** , **63** , **68** , **72** , **76** , **80** , **84** , **88** , **92** , **96** , **100** , **104** , **108** , **111** , **115** , **120** , **124**
45–0059A, **87** , **91** , **95**
45–0060A, **99** , **103** , **107**
45–0073, **96** , **100**
45–0074, **96** , **100**
45–0075A, **67** , **71** , **75** , **79** , **83**
45–0117, **37** , **41** , **45** , **53** , **57** , **68** , **72** , **76** , **80** , **84**
45–0118, **37** , **41** , **45** , **53** , **57** , **68** , **72** , **76** , **80** , **84**
45–0119A, **111** , **115** , **119** , **123**
45–0194, **49** , **51** , **59** , **63**
45–0195, **49** , **51** , **59** , **63**
45–0290, **92**
45–0291, **87** , **91** , **95** , **99**
45–0292, **100**
45–0294, **108**
45–0295, **107**
45–0297, **103**
45–0298, **116**
45–0300, **115**
45–0301, **111**
45–0318A, **87** , **91**
45–0319, **92**
45–0320, **87** , **91** , **95** , **99**
45–0321, **100**
45–0324, **111** , **115** , **120** , **124** , **127** , **129**
45–0325, **111** , **115** , **120** , **124**
45–0328A, **95** , **99**
45–0335, **116** , **124**
45–0336, **111** , **115** , **119** , **123**
45–0339, **108**
45–0340, **103** , **107**
45–0341A, **103** , **107**
45–0343, **103**
45–0363, **13** , **22** , **41** , **49** , **57** , **63**
45–0365, **76**
45–0367, **85**
45–0373, **88** , **92** , **104**
45–0374, **88** , **92** , **104** , **108**
45–0397A, **111** , **115**
45–0399, **129**
45–0401, **129**
45–0402, **127** , **129**
45–0407, **131** , **133**
45–0408, **133**
45–0409, **133**
45–0418, **119**
45–0419, **123**
45–0425, **124**
45–0427, **9** , **13** , **17** , **21** , **33** , **37** , **41** , **45** , **49** , **51** , **53** , **57** , **59** , **63**
45–0428, **63** , **67** , **71** , **75** , **79** , **83**
45–0520, **80**
45–0521, **80**
45–0522, **85**
45–0523, **85**
45–0524, **85**
45–0526, **72**
45–0527, **60** , **72**
45–0528, **72**
45–0529, **76**
45–0530, **76**
45–0531, **76**
45–0532, **76**
45–0533, **76**
45–0604, **76**
45–0619, **42** , **49** , **57** , **64**
45–0620, **42** , **49** , **57** , **64**
45–0621, **42** , **49** , **57** , **64**
45–0630, **72**
45–0631, **72**
45–0632, **76**
45–0633, **80**
45–0634, **85**
45–0651, **88**
45–0652, **88**
45–0653, **92**
45–0654, **96**
45–0655, **96**
45–0657, **104**
45–0658, **104**
45–0659, **108**
45–0660, **112**
45–0661, **112**
45–0662, **115**
45–0663, **88**
45–0664, **88**
45–0665, **88**
45–0666, **96**
45–0667, **96**
45–0668, **96**
45–0669, **96**
45–0674, **111**
45–0675, **92**
45–0676, **92**
45–0677, **92**
45–0678, **100**
45–0679, **100**
45–0680, **100**
45–0681, **100**
45–0682, **108**
45–0683, **108**
45–0689, **72**
45–0690, **80**
45–0715, **116** , **124**
45–0716, **116** , **124**
45–0719, **42** , **49** , **57** , **64**
45–0721, **88**
45–0723, **37** , **45** , **53** , **59**
45–0725, **38** , **45** , **53** , **59**
45–0726, **38** , **46** , **54** , **57** , **60** , **63**
45–0727, **38** , **41** , **46** , **49** , **54** , **60**
45–0742, **68** , **72** , **76** , **80** , **84** , **88** , **92** , **96** , **100** , **103** , **107** , **111** , **115** , **120** , **124**
45–0743, **38** , **46** , **53** , **60**
45–0744, **38** , **46** , **53** , **60**
45–0745, **38** , **46** , **54** , **60**
45–0746, **38** , **46** , **54** , **60**
45–0748, **38** , **46** , **53** , **60**

Copyright © 2016 Cummins Generator Technologies. All Rights Reserved.

Numerical Index (Continued)

Part No. Page

45–0749, **38** , **46** , **54** , **60**
45–0750, **38** , **46** , **54** , **60**
45–0751, **38** , **46** , **54** , **60**
45–0753, **88**
45–0755, **37** , **41** , **45** , **49** , **53** , **57** , **59** , **63**
45–0756, **37** , **45** , **53** , **59**
45–0757, **72**
45–0758, **72**
45–0759, **72**
45–0760, **72**
45–0761, **72**
45–0762, **72**
45–0764, **80**
45–0765, **80**
45–0766, **68** , **80**
45–0767, **80**
45–0768, **68** , **80**
45–0772, **38** , **46** , **54** , **60**
45–0773, **38** , **46** , **54** , **60**
45–0774, **38** , **46** , **54** , **60**
45–0775, **38** , **46** , **54** , **60**
45–0776, **88**
45–0777, **88**
45–0778, **88**
45–0779, **88**
45–0780, **96**
45–0781, **96**
45–0782, **96**
45–0783, **96**
45–0788, **104**
45–0789, **104**
45–0790, **104**
45–0791, **104**
45–0792, **112** , **120**
45–0793, **112** , **120**
45–0794, **112** , **120**
45–0802, **96**
45–0808, **100**
45–0813, **37** , **45** , **53** , **59**
45–0830, **37** , **45** , **53** , **59**

Part No. Page

45–0839, **68**
45–0840, **68**
45–0850, **68**
45–0851, **68**
45–0852, **68**
45–0857, **46**
45–0863, **85**
45–0866, **9** , **13** , **17** , **21** , **33** , **37** , **41** , **45** , **49** , **51** , **53** , **57** , **59** , **63**
45–0867, **71** , **75**
45–0868, **67** , **79** , **83**
45–0910, **92**
45–0912, **85**
45–0916, **88**
45–0917, **96**
45–0918, **51**
45–0932, **100**
45–0937, **104**
45–0942, **104**
45–0943, **104**
45–0944, **104**
45–0945, **104**
45–1005, **120**
45–1011, **120**
45–1012, **111** , **120**
45–1029, **131** , **133**
45–1038, **124**
45–1047, **120** , **124**
45–1048, **120** , **124**
45–1049, **120**
45–1050, **120**
45–1051, **120**
45–1052, **120**
45–1053, **124**
45–1054, **124**
45–1077, **124**
45–1078, **124**
45–1080, **67** , **71** , **75** , **79** , **83**
45–1082, **87** , **91** , **95** , **99** , **103** , **107** , **111** , **115** , **119**

Part No. Page

, **123** , **127** , **129** , **131** , **133**
45–1099, **95** , **99**
45–1100, **100**
45–1118, **131** , **133**
45–1119, **133**
45–1120, **133**
45–1134, **129**
45–1135, **129** , **133**
45–1136, **129** , **133**
45–1137, **129** , **133**
45–1138, **129** , **134**
45–1139, **131**
45–1140, **131**
45–1141, **131**
45–1142, **133**
45–1144, **127** , **131**
45–1145, **127** , **131**
45–1146, **127** , **131**
45–1147, **127**
45–1148, **127**
45–1149, **127**
45–1150, **127** , **129**
45–1151, **133**
45–1152, **133**
45–1153, **119** , **123**
45–1154, **124**
45–1155, **124**
45–1161, **9** , **13** , **18** , **22**
45–1162, **9** , **13** , **18** , **22**
45–1163, **9** , **13** , **18** , **22**
45–1164, **9** , **13** , **18** , **22**
45–1165, **9** , **13** , **17** , **21**
45–1166, **9** , **13** , **17** , **21**
45–1167, **17** , **21**
45–1168, **17** , **21**
45–1169, **17** , **21**
45–1170, **10** , **18**
45–1171, **10** , **18**
45–1172, **10** , **18**
45–1173, **10** , **18**

Part No. Page

45–1174, **10** , **18**
45–1175, **9** , **13** , **17** , **21**
45–1176, **17**
45–1180, **10** , **18**
45–1181, **10** , **18**
45–1183, **10** , **18**
45–1184, **10** , **18**
45–1185, **10** , **18**
45–1186, **10** , **18**
45–1188, **10** , **18**
45–1190, **9** , **18**
45–1191, **10** , **18**
45–1192, **10** , **18**
45–1193, **10** , **18**
45–1194, **10** , **18**
45–1195, **10** , **18**
45–1196, **10** , **18**
45–1197, **10** , **18**
45–1198, **10** , **18**
45–1199, **10** , **18**
45–1200, **13** , **22**
45–1201, **14** , **22**
45–1202, **14** , **22**
45–1203, **14** , **22**
45–1204, **10** , **18**
45–1205, **9** , **13** , **18** , **22**
45–1206, **9** , **13** , **17** , **21**
45–1209, **10** , **18**
45–1210, **9** , **13** , **17** , **21**
45–1211, **9** , **13** , **17** , **21**
45–1212, **9** , **13** , **17** , **21**
45–1213, **9** , **13** , **17** , **21**
45–1220, **129**
450–12590, **87** , **91** , **95** , **99**
450–13350, **87** , **91** , **95** , **99**
450–14310, **68** , **71** , **75** , **80** , **84** , **96** , **100** , **103** , **107** , **111** , **115** , **120** , **124**
450–14360, **51** , **67** , **71** , **75** , **79** , **83** , **131** , **133**
450–14450, **67** , **71** , **75** , **79** , **83**
450–15254, **87** , **91** , **103** , **107** , **111** , **115** , **120** , **124**

Copyright © 2016 Cummins Generator Technologies. All Rights Reserved.

Numerical Index (Continued)

Part No. Page

450–15489, **68** , **72** , **76** , **80** , **84** , **88** , **92** , **96** , **100** , **120** , **124**
450–15617, **67** , **71** , **75** , **79** , **83**
450–16016, **87** , **91** , **95** , **99**
450–16025, **103** , **111** , **115**
450–41650, **120** , **125**
450–41750, **120** , **125**
450–42150, **120** , **125**
458–10130, **92**
458–10260, **92**
458–10706, **92**
458–11170, **92**
458–12960, **87** , **91** , **95** , **99**
458–20200, **87** , **91**
458–20400, **87** , **91**
458–22800, **87** , **91**
462–10130, **100**
462–1020, **95** , **99**
462–10260, **100**
462–11170, **100**
462–11840, **96** , **100**
462–11880, **96** , **100**
462–12920, **103** , **107**
462–20100, **95** , **99**
462–23400, **95** , **99**
464–15090, **108**
464–15630, **108**
464–15650, **108**
464–31600, **103** , **107**
464–32100, **107**
520–10070, **100**
520–10153, **95** , **99**
520–10181, **95** , **99**
520–10286, **95** , **99**
520–10305, **95** , **99**
520–10306, **95** , **99**
520–10333, **100**
520–10534, **95** , **99**
520–10536, **96** , **100**
520–10557, **100**

Part No. Page

520–10776, **100**
520–10778, **100**
520–10780, **95** , **99**
520–10810, **95** , **99**
520–10811, **95** , **99**
520–10812, **95** , **99**
520–10816, **100**
520–10818, **100**
520–10906, **95** , **99**
520–10907, **95** , **99**
520–10908, **96** , **100**
520–10909, **96** , **100**
520–10910, **95** , **99**
520–10911, **95** , **99**
520–10912, **96** , **100**
520–10913, **96** , **100**
520–10914, **95** , **99**
520–10918, **95** , **99**
520–10933, **95** , **99**
520–10982, **95** , **99**
520–11015, **96** , **100**
520–1142, **95** , **99**
660–1005, **103** , **107**
660–10064, **103** , **107**
660–10071, **103** , **107**
660–10074, **108**
660–10650, **103** , **107**
660–10651, **103** , **107**
660–10652, **103** , **107**
660–10653, **103** , **107**
660–10654, **103** , **107**
660–10655, **103** , **107**
660–10783, **103** , **107**
660–10784, **103** , **107**
660–10860, **103** , **107**
660–10862, **103** , **107**
660–10864, **103** , **107**
660–10868, **108**
660–10870, **108**
660–10872, **108**

Part No. Page

660–10923, **107**
660–10924, **103** , **107**
660–10925, **103** , **107**
660–11219, **103** , **107**
660–11220, **103** , **107**
660–11242, **107**
660–11565, **103** , **107**
660–11604, **103** , **107**
730–10002, **71** , **75**
730–10233, **111** , **115**
730–10235, **111** , **115**
760–1009, **111** , **115**
760–10121, **111** , **115**
760–10122, **111** , **115**
760–10165, **116**
760–10171, **115**
760–10177, **115**
760–10178, **111**
760–1024, **111** , **115**
760–10550, **111** , **115**
760–10551, **115**
760–10552, **116**
760–10553, **116**
760–10562, **103** , **107** , **111** , **115**
760–10568, **111**
760–10662, **111** , **115**
760–10663, **111** , **115** , **120** , **124**
760–10664, **111** , **115**
760–10665, **111** , **115**
760–10728, **129**
760–10819, **119** , **123**
760–10821, **111** , **115** , **119** , **123**
760–10823, **119** , **123**
760–10829, **116** , **124**
760–10831, **116** , **124**
760–10912, **124**
760–10923, **124**
760–10924, **124**
760–10930, **124**

Part No. Page

760–10965, **119** , **123**
760–11005, **119** , **123**
760–11016, **119** , **123**
760–11026, **119** , **123**
760–11160, **124**
760–11185, **119** , **123**
760–11186, **120** , **124**
760–11205, **119** , **123**
760–11216, **119** , **123**
760–11268, **119** , **123**
760–11269, **120** , **124**
760–11274, **119** , **123**
760–11279, **119** , **123**
760–11392, **124**
760–1151, **119** , **123**
760–11594, **119** , **123**
760–1178, **119** , **123**
760–1186, **119** , **123**
800–1023, **127** , **129**
800–1024, **127** , **129**
800–10309, **129**
800–10313, **129**
800–10442, **127** , **129**
800–10447, **127** , **129**
800–10464, **129**
800–10466, **129**
800–10475, **129** , **133**
800–10477, **129** , **133**
800–1048, **131** , **133**
800–10481, **127** , **129**
800–1049, **131** , **133**
800–1055, **131** , **133**
800–1056, **131** , **133**
800–10602, **127** , **129**
800–10607, **127**
800–10983, **129**
800–30014, **131** , **133**
800–30015, **131** , **133**
800–30017, **131** , **133**
800–30020, **131** , **133**
800–30022, **133**

Copyright © 2016 Cummins Generator Technologies. All Rights Reserved.

Numerical Index (Continued)

Part No. Page

800–30049, **131** , **133**
800–30060, **131** , **133**
800–30165, **133**
800–30186, **131** , **133**
800–30187, **133**
800–30254, **131** , **133**
810–1015, **127** , **129** , **131** , **133**
820–10137, **129** , **133**
820–10138, **129** , **133**
820–10185, **127** , **129**
820–10186, **127** , **129**
A040G608, **9** , **13** , **18** , **22**
A040G610, **88** , **92** , **104** , **108**
A040G612, **9** , **13** , **18** , **22**
A040G614, **9** , **13** , **18** , **22**
A040G618, **9** , **13** , **18** , **22**
A040G620, **96** , **100**
A040G622, **72** , **76** , **80** , **84**
A040G624, **96** , **100** , **104** , **108**
A040G626, **111** , **115** , **120** , **124**
A040G630, **68** , **72** , **76** , **80** , **84**
A041B941, **119** , **123**
A041H349, **71** , **75**
A044W725 , **131** , **134**
A044W728, **131**
A044W728 , **134**
A051C308, **25**
A051G467, **29**
A051L176, **29** , **33**
A051L177, **33**
A051L180, **25**
A051L225, **29**
A051L226, **33**
A051L227, **33**
A051L228, **33**
A051P107, **33**
A051P111, **29**
A051P115, **25**

Part No. Page

A051Y935, **88** , **92**
A051Y955, **111** , **115** , **120** , **124**
A051Y983, **124**
A052E494, **33**
A052E626, **29**
A052E628, **25**
A052F473, **29**
A052F476, **25**
A052F581, **25**
A052H292, **33**
A052H908, **29**
A052J112, **25** , **29**
A052J113, **25**
A052J157, **33**
A052J677, **25**
A052J678, **25**
A052T358, **33**
A052V905, **29**
A052V920, **25**
A052W607, **29**
A052W626, **25**
A052W630, **33**
A052W676, **25**
A052W678, **25**
A052W684, **29**
A052W687, **33**
A052X170, **25**
A052X183, **29**
A052X197, **33**
A052X624, **25**
A052X629, **29**
A052X631, **33**
A053E622, **25**
A053E624, **25**
A053E721, **25**
A053F333, **33**
A053F381, **29**
A053F383, **29**
A053F395, **29**
A053F397, **29**

Part No. Page

A053F505, **33**
A053F533, **33**
A053G582, **33**
A053G584, **33**
A053L646, **25**
A053L652, **29**
A053L666, **29**
A053L667, **29**
A053L668, **25**
A053L669, **29**
A053L670, **33**
A053L675, **33**
A053L677, **33**
A053L678, **33**
A053P092, **25**
A053P101, **25**
A054G545, **29**
A054H811, **25** , **29**
A054H816, **29**
A054H820, **25** , **29**
A054H831, **25** , **29**
A054H854, **29**
A054H863, **29**
A054H889, **29**
A054H900, **29**
A054K278, **25**
A054K280, **25**
A054K282, **25**
A054K284, **25**
A054K286, **29**
A054K288, **29**
A054K290, **29**
A054K292, **29**
A054K294, **33**
A054K297, **33**
A054K299, **33**
A054K301, **33**
A054L239, **25**
A054L242, **25**
A054L246, **25**
A054L339, **25**

Part No. Page

A054P369, **25** , **29** , **33**
A054X535, **33**
A054X974, **33**
E000–13300, **127** , **129** , **131** , **134**
E000–14808/1P, **9** , **13** , **18** , **22**
E000–14831, **9** , **13** , **17** , **21** , **119** , **123**
E000–14851, **9** , **13** , **17** , **21**
E000–23212/1P, **68** , **72** , **76** , **80** , **84** , **88** , **92** , **96** , **100** , **103** , **108** , **111** , **115** , **120** , **124**
E000–23215, **68** , **72** , **76** , **80** , **84** , **88** , **92** , **96** , **100** , **104** , **108** , **111** , **115** , **120** , **124**
E000–23408, **68** , **72** , **76** , **80** , **84** , **88** , **92** , **96** , **100** , **103** , **108** , **120** , **124**
E000–23412/1P, **68** , **72** , **76** , **80** , **84** , **88** , **92** , **96** , **100** , **103** , **108** , **120** , **124**
E000–23800, **104** , **108** , **120** , **124** , **131** , **134**
E000–24210/1P, **68** , **72** , **76** , **80** , **84** , **88** , **92** , **96** , **100**
E000–24403/1P, **37** , **41** , **45** , **49** , **51** , **53** , **57** , **59** , **63** , **68** , **72** , **76** , **80** , **84** , **88** , **92** , **96** , **100**
E000–24408/1P, **37** , **41** , **45** , **49** , **51** , **53** , **57** , **59** , **63** , **68** , **72** , **76** , **80** , **84** , **88** , **92** , **96** , **100**
E000–24602/1P, **37** , **41** , **45** , **49** , **51** , **53** , **57** , **59** , **63** , **68** , **72** , **76** , **80** , **84**
E000–24608/1P, **37** , **41** , **45** , **49** , **51** , **53** , **57** , **59** , **63** , **68** , **72** , **76** , **80** , **84**
QMSN, **57**
RSK–1101, **9** , **13** , **17** , **21** , **33** , **37** , **41** , **45** , **49** , **51** , **53** , **57** , **59** , **63**
RSK–2001, **67** , **71** , **75** , **79** , **83**
RSK–5001, **87** , **91** , **95** , **99**

Copyright © 2016 Cummins Generator Technologies. All Rights Reserved.

Numerical Index (Continued)

Part No. Page **Part No. Page** **Part No. Page** **Part No. Page**

RSK–6001, **103** , **107** , **111** , **115** , **119** , **123** , **127** , **129** , **131** , **133**

Copyright © 2016 Cummins Generator Technologies. All Rights Reserved.

power.cummins.com

Copyright ©2016 Cummins Inc. All rights reserved.
Cummins Power Generation, the "C" logo, and Cummins are trademarks of Cummins Inc.
PowerCommand, AmpSentry, InPower and "Our energy working for you." are trademarks of Cummins Power Generation Inc.
Other company, product, or service names may be trademarks or service marks of others.
Specifications are subject to change without notice.